OBRAZAC 1

Elektronski potpis projektanta	Elektronski potpis revidenta	Elektronski potpis nadležnog organa za izdavanje građevinske dozvole

INVESTITOR[1]	MINISTARSTVO PROSVJETE, NAUKE I INOVACIJA Ulica Vaka Đurovića bb, 81000 Podgorica
OBJEKAT[2]	Rekonstrukcija-dogradnja Sala za fizičko vaspitanje i uređenje školskog dvorišta JU OŠ "Lovćenski partizanski odred"
LOKACIJA[3]	Dio UP 479, u zahvatu DUP-a "Bogdanov kraj (Zona C)", kat. parc. br. 3290/1 , 3291/2,3287/1 i 3293/1, K.O. Cetinje I, Opština Cetinje
DIO TEHNIČKE DOKUMENTACIJE[4]	SVESKA 5.2 – MAŠINSKI PROJEKAT – SPRINKLER INSTALACIJE
AUTOR PROJEKTA[5]	Arh. Veselin Radulović, dipl.inž.
PROJEKTANT[6]	URBI PRO DOO, PODGORICA
ODGOVORNO LICE[7]	Dušan Džudović, dipl.inž.arh.
VODEĆI PROJEKTANT[8]	Dušan Džudović, dipl.inž.arh.
ODGOVORNI PROJEKTANT[9]	Vuk Kasalica, dipl.inž.maš.
SARADNICI NA PROJEKTU[10]	_____

[1] Naziv/ime investitora
[2]Naziv objekta koji se gradi
[3]Mjesto gradnje, planski dokument, urbanistička parcela, katastarska opština, katastarska parcela
[4]Idejno rješenje, idejni projekat, glavni projekat, projekat izvedenog stanja, projekat održavanja
[5]Ime i prezime autora projekta
[6]Naziv privrednog društva, pravnog lica odnosno preduzetnika koji je izradio tehničku dokumentaciju, adresa
[7]Ime i prezime odgovornog lica u privrednom društvu ili pravnom licu ili ime i prezime preduzetnika
[8]Ime i prezime vodećeg projektanta
[9]Ime i prezime odgovornog projektanta
[10]Ime i prezime saradnika na izradi dijela tehničke dokumentacije

OBRAZAC 2

Elektronski potpis projektanta	Elektronski potpis revidenta	Elektronski potpis nadležnog organa za izdavanje građevinske dozvole

INVESTITOR[1]	MINISTARSTVO PROSVJETE, NAUKE I INOVACIJA Ulica Vaka Đurovića bb, 81000 Podgorica
OBJEKAT[2]	Rekonstrukcija-dogradnja Sala za fizičko vaspitanje i uređenje školskog dvorišta JU OŠ "Lovćenski partizanski odred"
LOKACIJA[3]	Dio UP 479, u zahvatu DUP-a "Bogdanov kraj (Zona C)", kat. parc. br. 3290/1 , 3291/2,3287/1 i 3293/1, K.O. Cetinje I, Opština Cetinje
VRSTA TEHNIČKE DOKUMENTACIJE[4]	GLAVNI PROJEKAT
AUTOR PROJEKTA[5]	Arh. Veselin Radulović, dipl.inž.
PROJEKTANT[6]	URBI PRO DOO, PODGORICA
ODGOVORNO LICE[7]	Dušan Džudović, dipl.inž.arh.
VODEĆI PROJEKTANT[8]	Dušan Džudović, dipl.inž.arh.

[1] Naziv/ime investitora
[2]Naziv objekta koji se gradi
[3]Mjesto gradnje, planski dokument, urbanistička parcela, katastarska opština, katastarska parcela
[4]Idejno rješenje, idejni projekat, glavni projekat, projekat izvedenog stanja, projekat održavanja
[5]Ime i prezime autora projekta
[6]Naziv privrednog društva, pravnog lica odnosno preduzetnika koji je izradio tehničku dokumentaciju, adresa
[7]Ime i prezime odgovornog lica u privrednom društvu ili pravnom licu ili ime i prezime preduzetnika
[8]Ime i prezime vodećeg projektanta

POJEDINAČNI SADRŽAJ PROJEKTA

1. TEKSTUALNA DOKUMENTACIJA.....1

1.1 Tehnički opis instalacija.....2
1.2 Program kontrole i osiguranja kvaliteta.....11
1.3 Uputstvo za upravljanje građevinskim otpadom.....18
1.4 Karakteristike i svojstva materijala i opreme.....24
1.5 Spisak korišćenih propisa i literature.....60

2. NUMERIČKA DOKUMENTACIJA.....61

2.1 Proračuni.....62
2.2 Predmjer i predračun radova.....89

3. GRAFIČKA DOKUMENTACIJA.....97

3.1 Situacija.....98
3.2 Osnova prizemlja.....99
3.3 Galerija.....100
3.4 Krovna konstrukcija.....101
3.5 Presjek 1-1, 3-3.....102
3.6 Aksonometrija.....103
3.7 Podstanica i rezervoar.....104
3.8 Tehnološka šema.....105
3.9 Detalj ugradnje mlaznica i oslonci cjevovoda.....106

1. TEKSTUALNA DOKUMENTACIJA

1.1 TEHNIČKI OPIS INSTALACIJE

1. LOKACIJA INSTALACIJE

Stabilna automatska instalacija za gašenje požara vodom – sprinkler instalacija predviđena je za gašenje požara u sklopu rekonstrukcije Sale za fizičko vaspitanje JU OŠ "Lovćenski partizanski odred".

2. OPIS INSTALACIJE

Sprinkler instalacija spada među najefikasnije instalacije za gašenje požara. To je automatska stabilna instalacija za gašenje požara rasprskavajućim mlazom vode, koja u pripremnom položaju prije aktiviranja ima zatvorene mlaznice, koje se otvaraju na određenoj povišenoj temperaturi i na taj način započinje automatsko aktiviranje instalacije. Cjevovodi koji dovode vodu do mlaznica su pod stalnim pritiskom vode. Gašenje požara se vrši određenim brojem mlaznica, zavisno od brzine širenja požara.
Pored gašenja, pri aktiviranju sprinkler instalacije istovremeno vrši i dojavu požara davanjem alarmnog signala.

3. TIP INSTALACIJE

Usvojena je suva sprinkler instalacija, jer u objektu koji se štiti postoji mogućnost zamrzavanja vode u cjevovodima. Prostorija za smještaj opreme obezbijeđena je od niskih temperatura.
Cjevovodi suve sprinkler instalacije su stalno napunjeni vodom pod pritiskom do klapne sprinkler ventila, dok je sa gornje strane klapne cjevovod pod vazdušnim pritiskom. Pritisak vazduha u sistemu u stanju mirovanja se održava preko kompresora u sprinkler podstanici, iz tog razloga pumpno postrojenje ne sadrži džokej pumpu.
Od trenutka aktiviranja instalacije, počinje da izlazi vazduh, a zatim vrlo brzo dolazi voda do mjesta gde se pojavio požar.

4. OSNOVNI ELEMENTI INSTALACIJE

Sprinkler instalacija se sastoji od sledećih elemenata:
- Sprinkler pumpno postrojenje sastavljeno od 1 elektro radne i 1 elektro rezervne pumpe,
- suvi sprinkler alarmni ventil,
- kompresor,
- cijevna mreža na kojoj su postavljene sprinkler mlaznice,
- sprinkler mlaznica – viseća, stojeća (fiskulturna sala),
- dovodni cjevovod,
- ostala prateća armatura.

5. SPRINKLER PODSTANICA

Sprinkler podstanica je ukopana i nalazi se pored objekta, uz ukopani rezervoar (dato grafičkom dokumentacijom). Temperatura u sprinkler stanici mora biti iznad +5°C.

Rad pumpi:
- elektro pumpa (radna) se posredstvom automatike sa presostatima uključuje kada pritisak u instalaciji dostigne određenu vrijednost. Onog trenutka kada startuje ova pumpa mora se automatski ugasiti džokej pumpa. Rad elektro pumpe znači da imamo stanje požara pa automatsko isključivanje rada ove pumpe ne smije postojati, tj. rad ove pumpe se može samo ručno prekinuti. Takođe ne smije postojati ni zaštita pumpe od rada "na suvo";

- elektro pumpa (rezervna) se posredstvom automatike sa presostatima uključuje ako radna pumpa iz bilo kog razloga nije uspjela da startuje. U trenutku kada pritisak u instalaciji dostigne određenu vrijednost. Rad elektro pumpe znači da imamo stanje požara pa automatsko isključivanje rada ove pumpe ne smije postojati, tj. rad ove pumpe može biti samo ručno prekinut. Takođe ne smije postojati ni zaštita pumpe od rada "na suvo".

Signali pumpi:
Svi signali, dobijeni od monokompaktnog pumpnog postrojenja, moraju biti dati u okviru sistema za nadzor i upravljanje.
- elektro pumpa (radna)
    - spremna za rad
    - neuspjeli start
    - rad elektro pumpe
- elektro pumpa (rezervna)
    - spremna za rad
    - neuspjeli start
    - rad elektro pumpe

Signali od ovalnih zasuna:
Mikroprekidači na ovim ovalnim zasunima treba da daju, u okviru sistema za nadzor i upravljanje ili sistema za dojavu požara, signal ako ventil nije u odgovarajućem položaju.

Signal presostata mokrog sprinkler ventila:
Presostat sprinkler ventila daje signal da je podignuta klapna mokrog sprinkler ventila. Ovakav signal znači moguć požar jer klapna sprinkler ventila može biti malo otvorena usled zaglavljivanja klapne sprinkler ventila. Zbog mogućnosti da se desi takva situacija, ovaj signal se šalje protivpožarnom sistemu. Ovaj signal treba da indukuje interni alarm u prostoriji sistema za nadzor i upravljanje. Akcije koje moraju uslijediti moraju biti adekvatne za stanju požara, ali bez izvršnih funkcija protivpožarne centrale (primjer: obaranje protivpožarnih klapni)

Signali indikatora protoka:
Indikator protoka je uređaj koji usled kretanja vode kroz cijev (u jednom smjeru) daje kontakt koji se prenosi ka protivpožarnoj centrali i prema automatskim ventilima sa elekro pogonom. Ovakav signal se tretira kao siguran požar. Izvršne funkcije protivpožarne centrale moraju biti adekvatne stanju požara. Indikator protoka se nalazi na horizontalnom dijelu cjevovoda, i to na dovodnom cevovodu iz sprinkler pumpne stanice. Za ovaj sistem predviđena su 2 indikatora protoka (fiskulturna sala i ostale prostorije).

Priključak za vatrogasno vozilo:
je priključak koji se nalazi na prizemnom nivou objekta, na oko 1.0 m iznad nivoa terena, i on je još jedna mjera sigurnosti, koja omogućava da se vatrogasno vozilo priključi na sprinkler sistem i da na taj način gasi požar. Ova dodatna mjera sigurnosti je predviđena u slučaju da u sistemu nema dovoljno vode.

Alarmna suva sprinkler stanica:
sadrži nepovratnu klapnu koja je u zatvorenom položaju usled jednakih pritisaka uzvodno i nizvodno od klapne. Ovo uravnoteženje pritisaka se obavlja preko bajpasne klapnom. U slučaju požara, ampula sprinkler mlaznice puca. Pritisak iznad klapne (nizvodno) pada, omogućujući klapni da se otvori i propusti potrebnu količinu vode do sprinkler mlaznica. Detaljnije objašnjenje je dato tačkom 8. Način rada instalacije.

6. MREŽA CJEVOVODA

Mreža cjevovoda ima osnovnu funkciju da spaja sprinkler mlaznice sa izvorom vode, osiguravajući osnovne potrebne parametre – količinu vode i pritisak. Vodi se tako da se pokrije cijela površina koja se štiti. Izrađuje se od crnih bešavnih cijevi.
Cijevi se međusobno spajaju mehaničkim spojnicama iznad prečnika DN50, a za DN50 i manje prečnike, spajanje je predviđeno pocinkovanim navojnim fitingom prema preporukama CEA 4001.
Cjevovodi se vode sa nagibom prema mjestima ispusta, kako bi se mogli isprazniti.Na krajevima magistralnih cjevovoda predviđene su slavine za ispiranje DN50.
Pad iznosi:

-0,4% za glavne cijevi
-0,2% za razvodne cjevovode

Način formiranja cjevne mreže ima direktan uticaj na uniformnost pokrivanja štićenog prostora. Praktični uslovi i mogućnosti odredili su raspored cjevne mreže i to u zavisnosti od konstrukcije i namjene objekta. Prema propisima i standardima, maksimalni dozvoljeni pritisak u cjevovodu ne sme da pređe vrednost od $p_{max.}$ = 12 bar.

7. SPRINKLER MLAZNICE

Sprinkler mlaznice su važan elemenat sprinkler instalacije, jer vrše njeno aktiviranje. One se pri određenoj temperaturi otvaraju, a svojom konstrukcijom omogućavaju rasipanje vode tako da ona ravnomjerno kvasi površinu na kojoj se desio požar.
Sprinkler mlaznica se sastoji od sledećih delova:

- tijela mlaznice
- zatvarača kojeg na sjedištu drži ampula ispunjena ekspanzivnom tečnošću (ampula puca kada temperatura oko mlaznice dostigne vrednost od 68 ^{o}C)
- raspršivača učvršćenog na vrhu tijela mlaznice

Sprinkler mlaznice se postavljaju sa deflektorom mlaza okrenutim dole (viseća) i gore (stojeća).
Minimalno dozvoljeni pritisak na sprinkler mlaznici iznosi p_{min} = 0.35 bar.

8. NAČIN RADA INSTALACIJE

Cijevna mreža je postavljena tako tako da su mlaznice okrenute dole (viseća) i gore (stojeća, za dio objekta fiskulturna sala).
Cijela instalacija je napunjena vazduhom pod pritiskom (nizvodno od klapne sprinkler ventila), a vodom uzvodno od klapne sprinkler ventila.
Svaka mlaznica na svom izlaznom dijielu ima ampulu koja zatvara otvor.
Prilikom pojave temperature od 68°C, dolazi do pucanja ampule na mlaznici usled širenja ekspanzione tečnosti koja se nalazi u ampuli. Na taj način se otvara izlaz kroz koji izlazi vazduh iz sistema i nakon njega slijedi isticanje vode.
Voda udara u deflektor i raspršava se tako da u kružnoj lepezi pokriva površinu koja se štiti.
U slučaju da prvo aktivirana sprinkler mlaznica ne uspije da ugasi požar, pa se on proširi, otvaraju se sledeće sprinkler mlaznice u neposrednoj blizini mjesta požara.
Usled otvaranja mlaznice pada pritisak u gornjoj komori sprinkler ventila, podiže se klapna u sprinkler ventilu. Voda iz podstanice protiče ka sprinklerskim mlaznicama. Preko žleba u sjedištu sprinkler ventila voda ulazi u cjevovod prema hidrauličkom alarmnom zvonu.
Alarmno zvono se nalazi van pumpne stanice, na visini od oko 2 metra od kote poda.
Prilikom kretanja vode u cjevovodima, indikator protoka, daje impuls koji se prenosi na centralu za dojavu požara, a ona zatim daje alarmni signal da je instalacija proradila.

9. SNABDIJEVANJE VODOM SPRINKLER INSTALACIJE

Za pravilan i siguran rad sprinkler instalacije najvažniju ulogu ima sigurno snabdijevanje vodom, dovoljne količine sa potrebnim pritiskom tokom vremena gašenja. Snabdijevanje vodom mora biti pouzdano i ne smije biti ugroženo niskim temperaturama.
Kao neiscrpni izvor vode za sprinkler instalaciju koristiti rezervoar.

10. SNABDIJEVANJE PUMPI ELEKTRIČNOM ENERGIJOM

Pumpe sprinkler instalacije treba da se napajaju električnom energijom iz dva izvora, gradske distributivne mreže i dizel agregata.
Kablovi koji napajaju električnom energijom pumpe su cijelom dužinom zaštićeni od požara u trajanju od 90 minuta. Način vođenja, način zaštite kao i karakteristike kablova su dati u projektu elektroenergetskih instalacija.

NAPOMENA: Rezervoar i način spajanja rezervoara redukovanog kapaciteta je dio AG projekta i ViK projekata. Prema propisima EN 12845 standarda napajanje rezervoara se vrši preko najmanje dva mehanička plovka koji treba da obezbijede dotok vode iz gradske mreže i da ne utiču na rad pumpnog postrojenja, dakle da imaju dotok najmanje jednak proračunskom protoku sistema čak i u slučaju da jedan ventil ne funkcioniše.

9.3.4 Reduced capacity tanks

The following conditions shall be met for reduced capacity tanks:

a) the inflow shall be from a town main and shall be automatic, via at least two mechanical float valves. The inflow shall not adversely influence the pump suction. The failure of a single float valve shall not impair the required infill rate;

b) the effective capacity of the tank shall be no less than that shown in Table 11;

c) the tank capacity plus the inflow shall be sufficient to supply the system at full capacity as specified in 9.3.2;

d) it shall be possible to check the capacity of the inflow;

e) the inflow arrangement shall be accessible for inspection.

Odgovorni inženjer
Vuk Kasalica, dipl. ing. maš.

ŠEMATSKI PRIKAZ RADA SUVOG SPRINKLER VENTILA

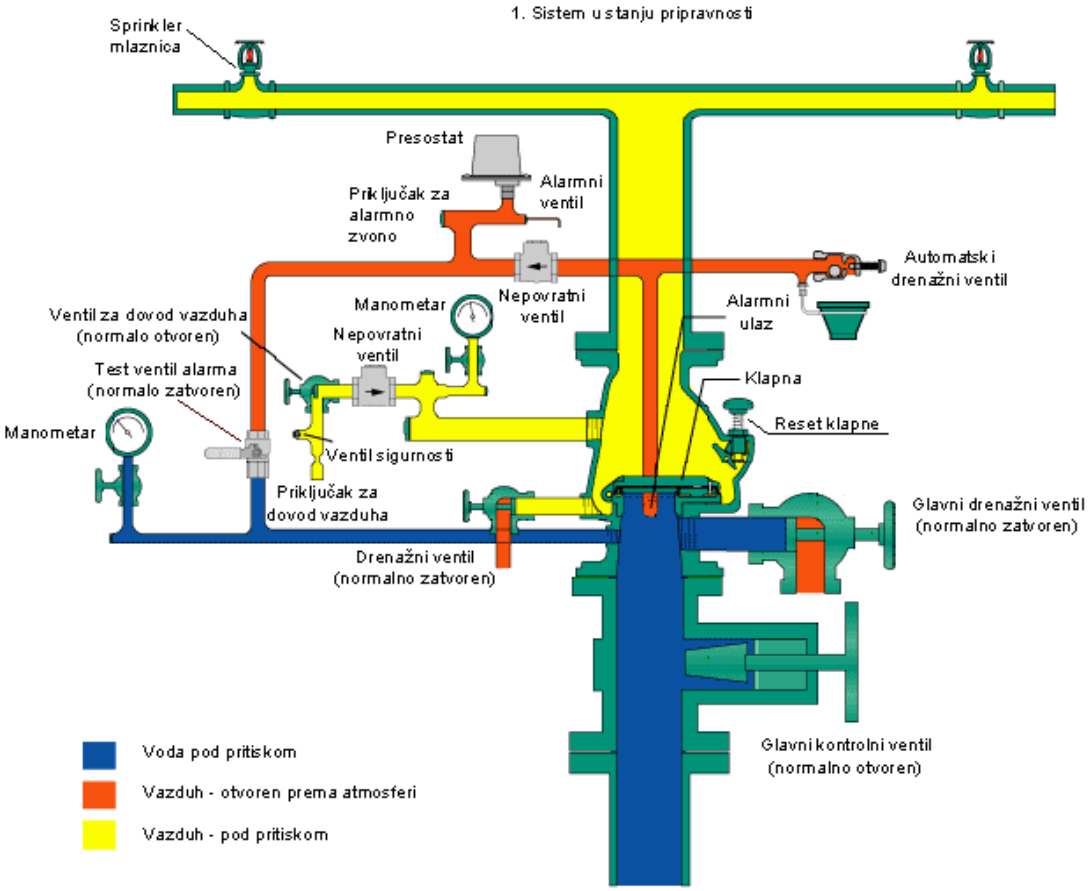

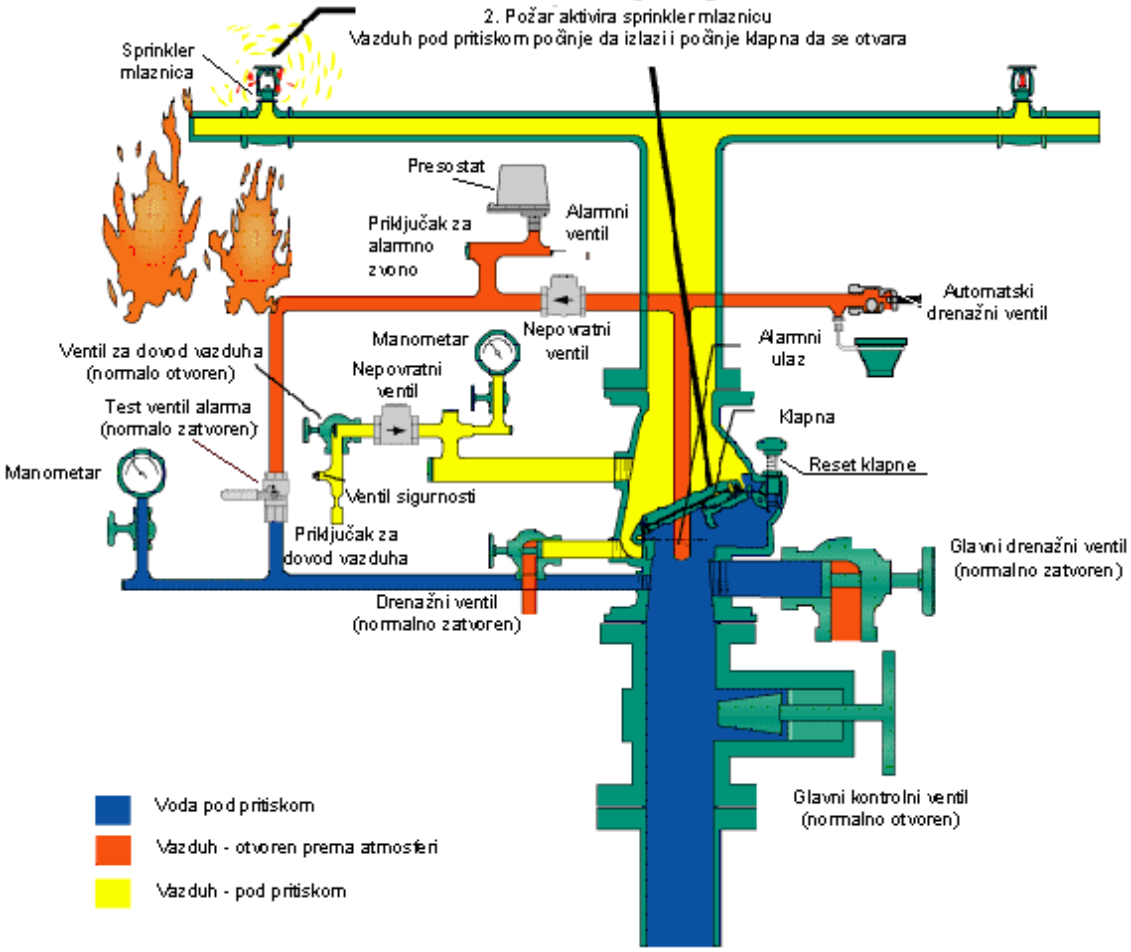

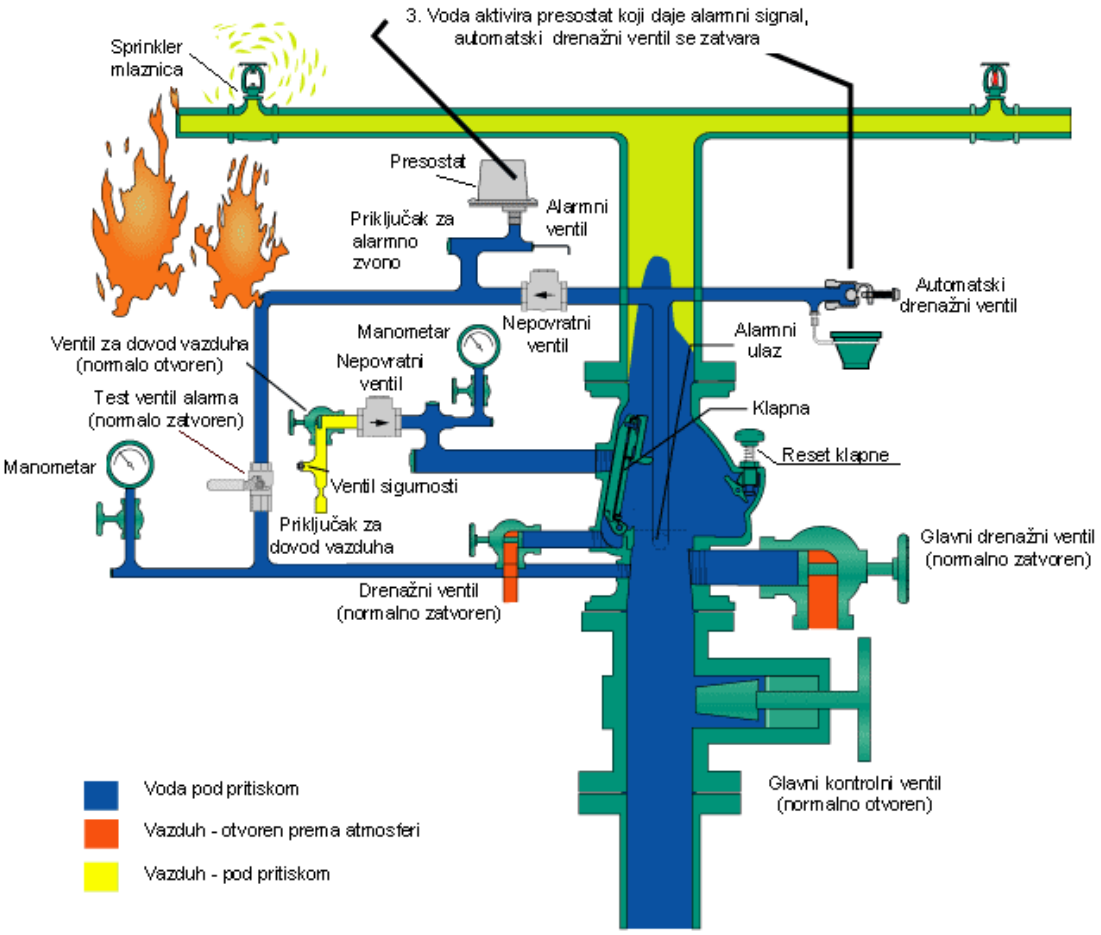
3. Voda aktivira presostat koji daje alarmni signal, automatski drenažni ventil se zatvara
Sprinkler mlaznica
Presostat
Alarmni ventil
Priključak za alarmno zvono
Automatski drenažni ventil
Nepovratni ventil
Manometar
Nepovratni ventil
Alarmni ulaz
Ventil za dovod vazduha (normalo otvoren)
Test ventil alarma (normalo zatvoren)
Klapna
Reset klapne
Manometar
Ventil sigurnosti
Priključak za dovod vazduha
Glavni drenažni ventil (normalno zatvoren)
Drenažni ventil (normalno zatvoren)
Glavni kontrolni ventil (normalno otvoren)
Voda pod pritiskom
Vazduh - otvoren prema atmosferi
Vazduh - pod pritiskom

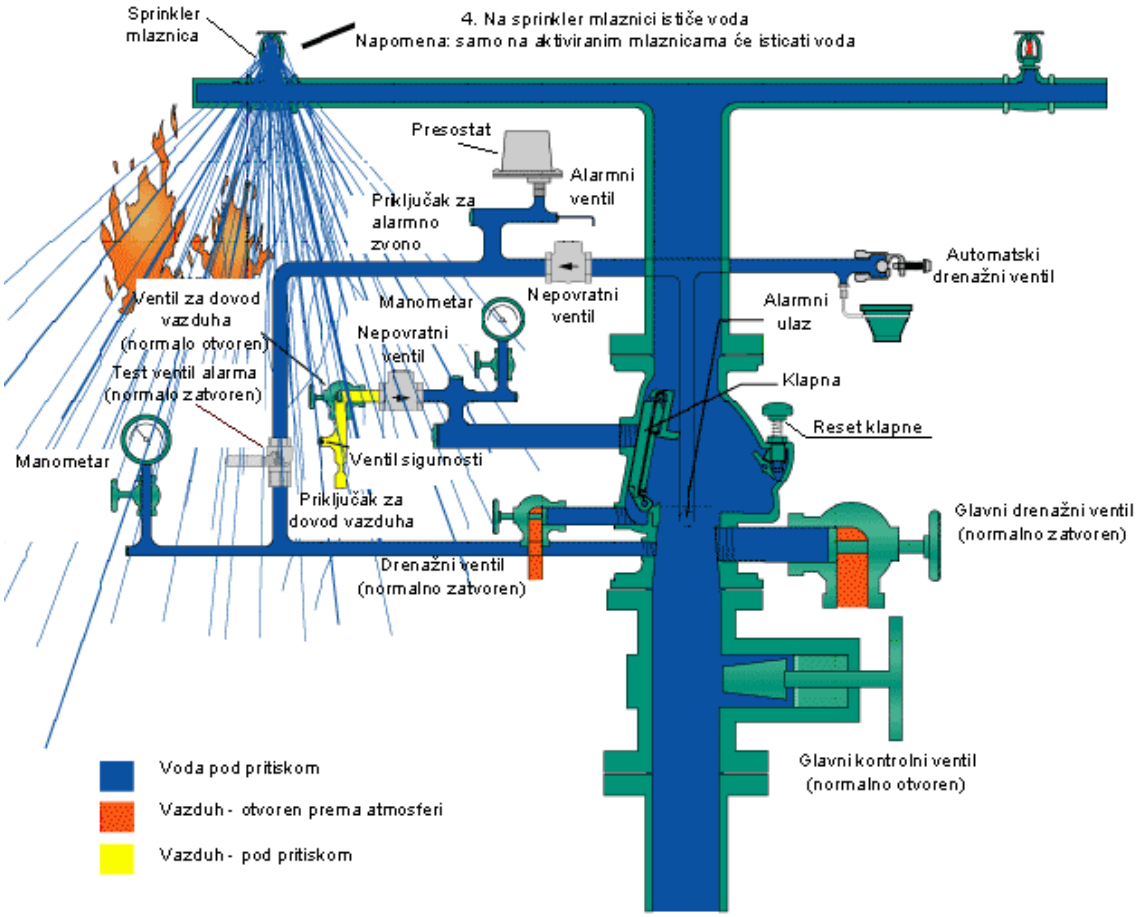
Sprinkler mlaznica
4. Na sprinkler mlaznici ističe voda
Napomena: samo na aktiviranim mlaznicama će isticati voda
Presostat
Alarmni ventil
Priključak za alarmno zvono
Automatski drenažni ventil
Nepovratni ventil
Manometar
Nepovratni ventil
Alarmni ulaz
Ventil za dovod vazduha (normalo otvoren)
Test ventil alarma (normalo zatvoren)
Klapna
Reset klapne
Manometar
Ventil sigurnosti
Priključak za dovod vazduha
Glavni drenažni ventil (normalno zatvoren)
Drenažni ventil (normalno zatvoren)
Glavni kontrolni ventil (normalno otvoren)
Voda pod pritiskom
Vazduh - otvoren prema atmosferi
Vazduh - pod pritiskom

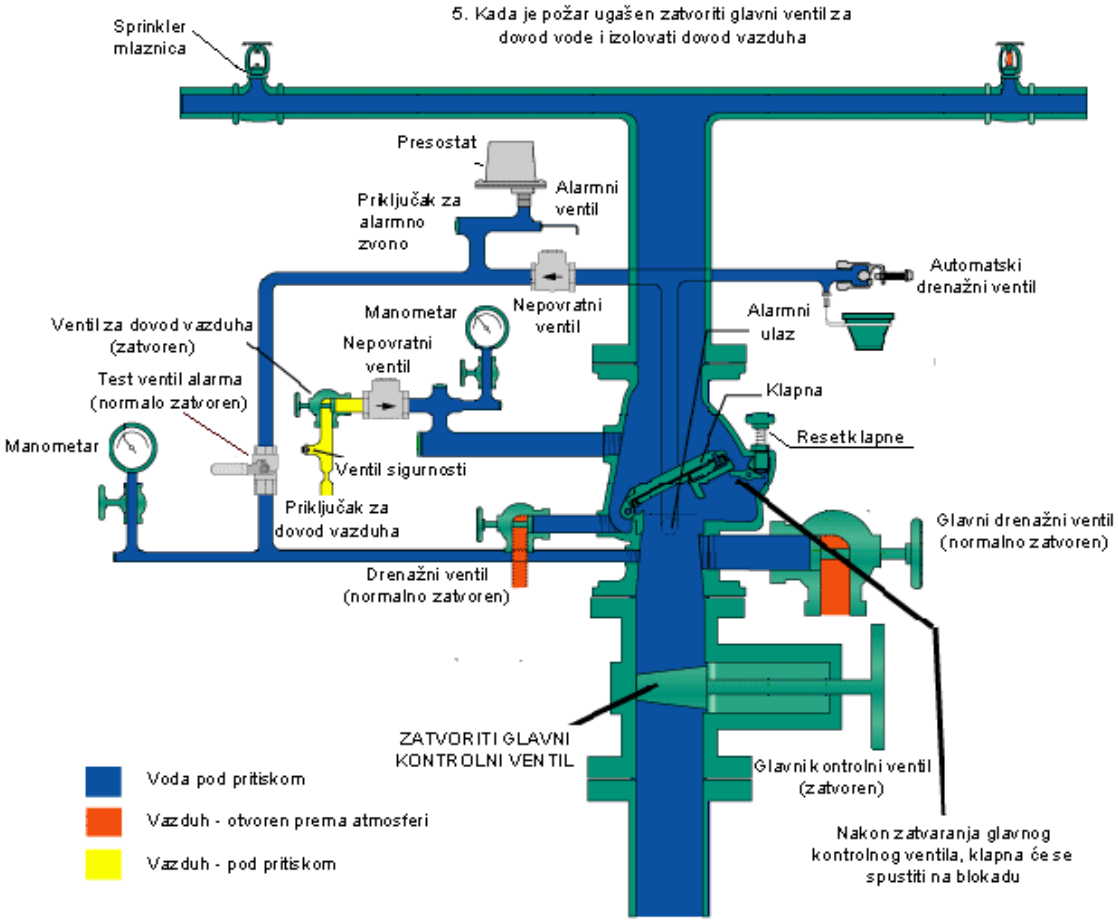
5. Kada je požar ugašen zatvoriti glavni ventil za dovod vode i izolovati dovod vazduha
Sprinkler mlaznica
Presostat
Alarmni ventil
Priključak za alarmno zvono
Automatski drenažni ventil
Manometar
Nepovratni ventil
Alarmni ulaz
Ventil za dovod vazduha (zatvoren)
Nepovratni ventil
Test ventil alarma (normalo zatvoren)
Klapna
Manometar
Resetklapne
Ventil sigurnosti
Priključak za dovod vazduha
Glavni drenažni ventil (normalno zatvoren)
Drenažni ventil (normalno zatvoren)
ZATVORITI GLAVNI KONTROLNI VENTIL
Glavni kontrolni ventil (zatvoren)
Voda pod pritiskom
Vazduh - otvoren prema atmosferi
Vazduh - pod pritiskom
Nakon zatvaranja glavnog kontrolnog ventila, klapna će se spustiti na blokadu

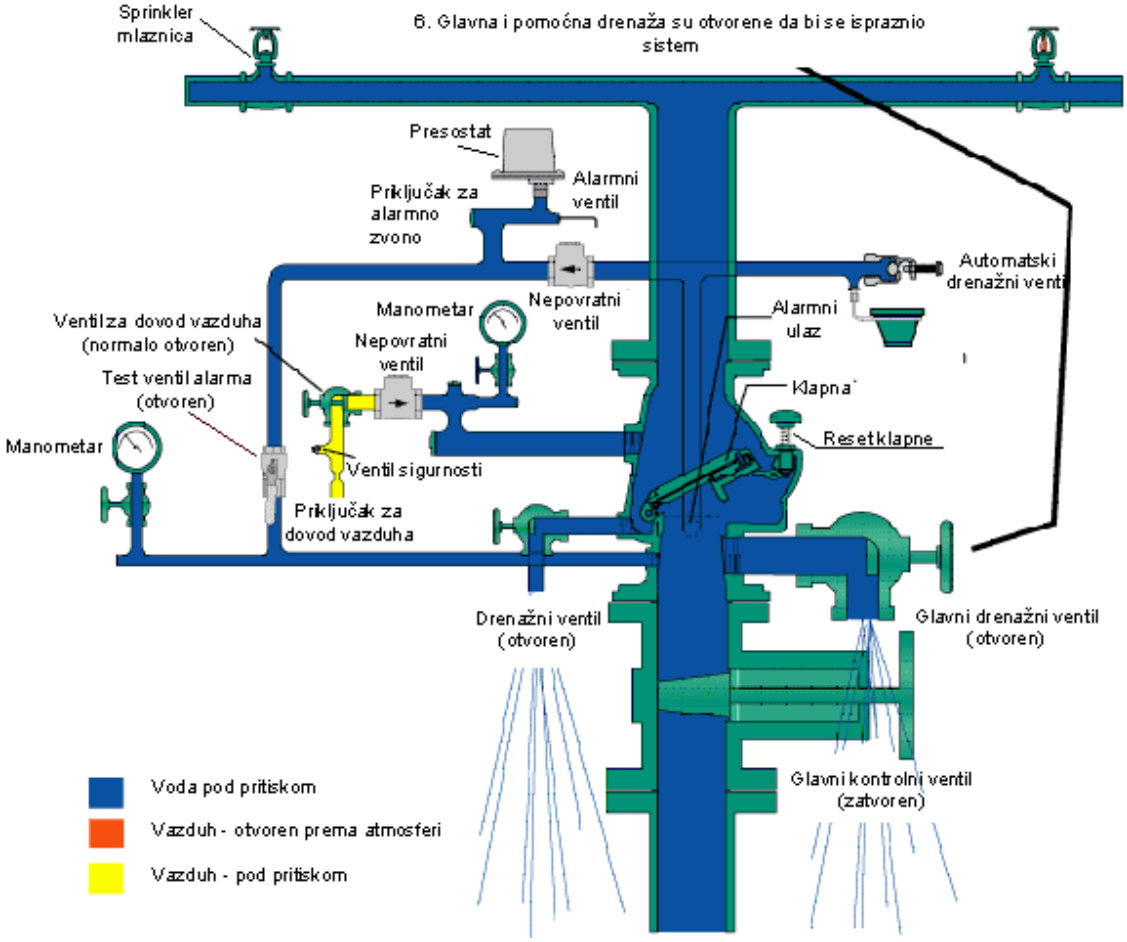
6. Glavna i pomoćna drenaža su otvorene da bi se ispraznio sistem
Sprinkler mlaznica
Presostat
Alarmni ventil
Priključak za alarmno zvono
Automatski drenažni ventil
Manometar
Nepovratni ventil
Alarmni ulaz
Ventil za dovod vazduha (normalo otvoren)
Nepovratni ventil
Test ventil alarma (otvoren)
Klapna
Manometar
Resetklapne
Ventil sigurnosti
Priključak za dovod vazduha
Drenažni ventil (otvoren)
Glavni drenažni ventil (otvoren)
Glavni kontrolni ventil (zatvoren)
Voda pod pritiskom
Vazduh - otvoren prema atmosferi
Vazduh - pod pritiskom

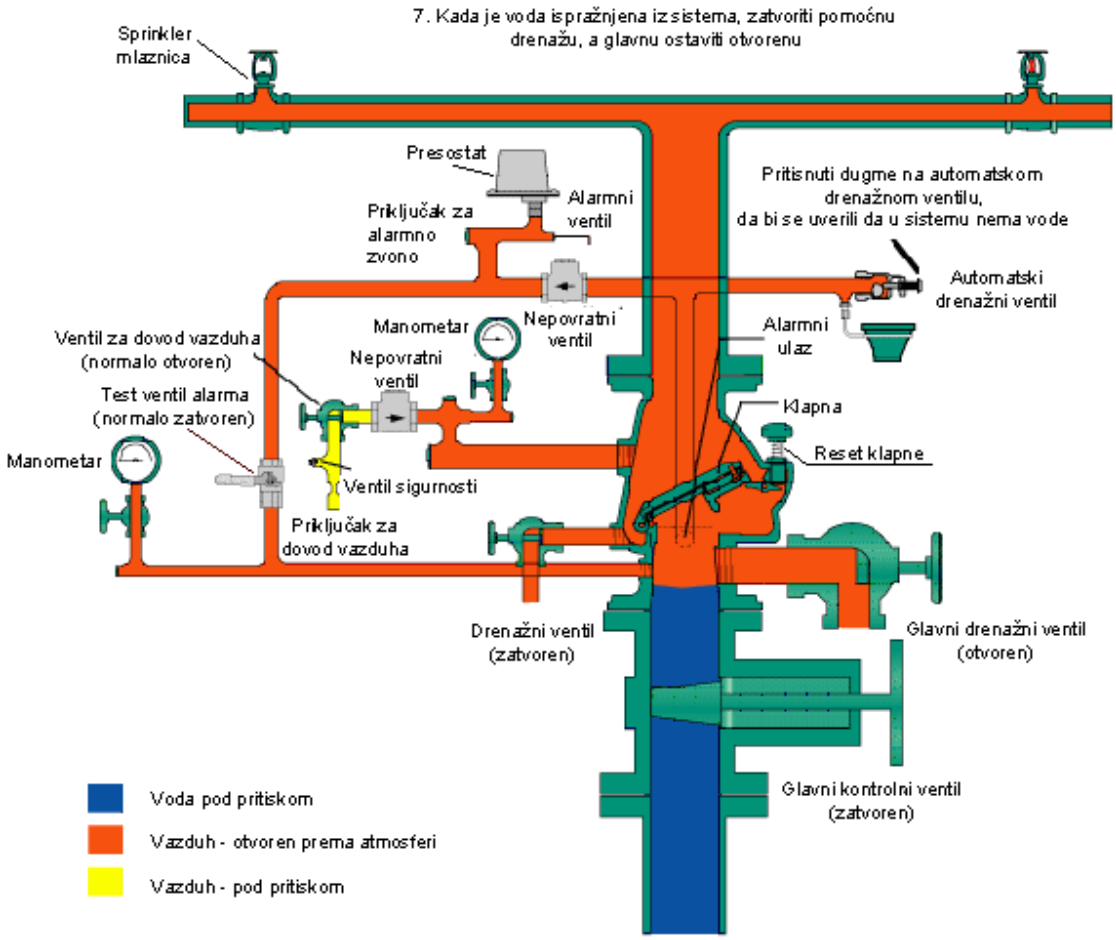
7. Kada je voda ispražnjena iz sistema, zatvoriti pomoćnu drenažu, a glavnu ostaviti otvorenu
Sprinkler mlaznica
Presostat
Alarmni ventil
Priključak za alarmno zvono
Pritisnuti dugme na automatskom drenažnom ventilu, da bi se uverili da u sistemu nema vode
Automatski drenažni ventil
Manometar
Nepovratni ventil
Alarmni ulaz
Ventil za dovod vazduha (normalo otvoren)
Nepovratni ventil
Test ventil alarma (normalo zatvoren)
Klapna
Manometar
Reset klapne
Ventil sigurnosti
Priključak za dovod vazduha
Drenažni ventil (zatvoren)
Glavni drenažni ventil (otvoren)
Glavni kontrolni ventil (zatvoren)
Voda pod pritiskom
Vazduh - otvoren prema atmosferi
Vazduh - pod pritiskom

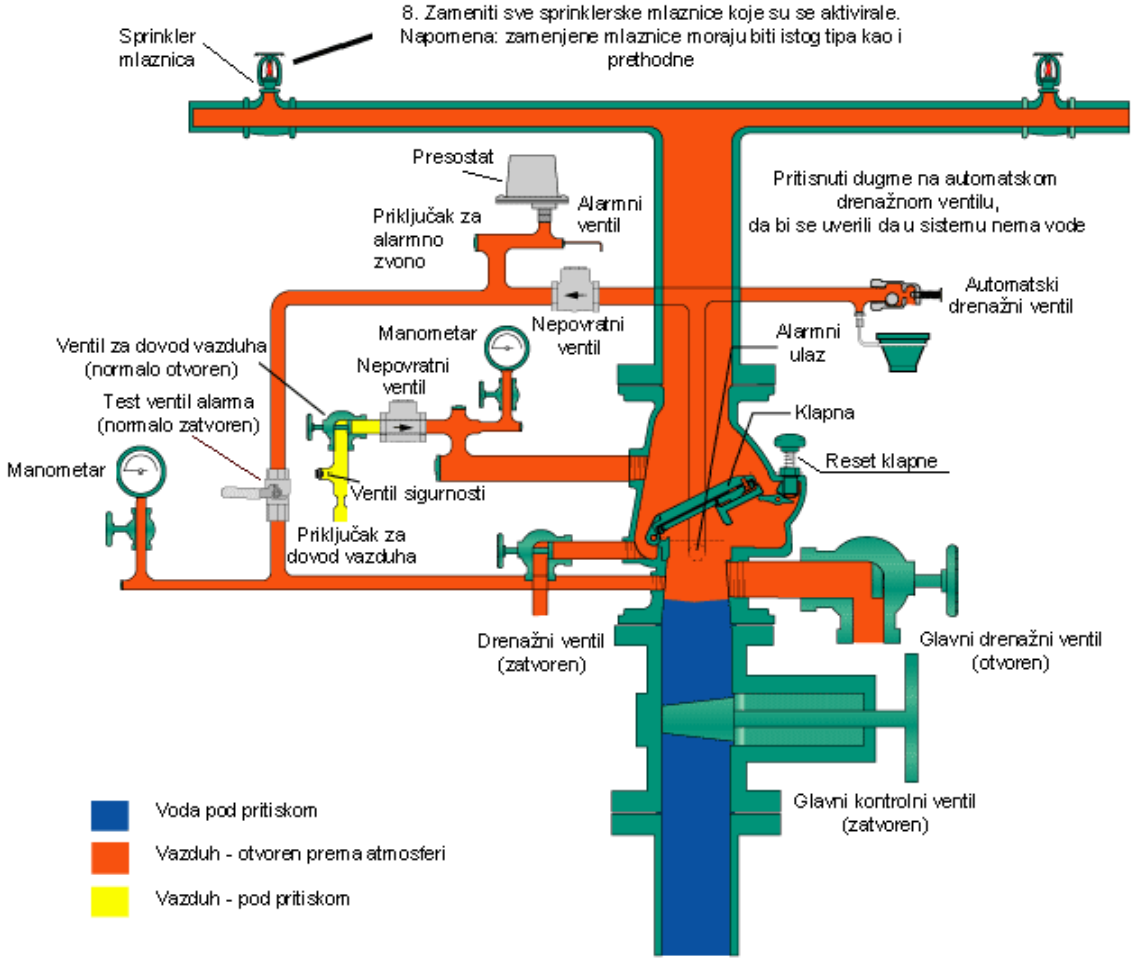
8. Zameniti sve sprinklerske mlaznice koje su se aktivirale. Napomena: zamenjene mlaznice moraju biti istog tipa kao i prethodne
Sprinkler mlaznica
Presostat
Alarmni ventil
Priključak za alarmno zvono
Pritisnuti dugme na automatskom drenažnom ventilu, da bi se uverili da u sistemu nema vode
Automatski drenažni ventil
Manometar
Nepovratni ventil
Alarmni ulaz
Ventil za dovod vazduha (normalo otvoren)
Nepovratni ventil
Test ventil alarma (normalo zatvoren)
Klapna
Manometar
Reset klapne
Ventil sigurnosti
Priključak za dovod vazduha
Drenažni ventil (zatvoren)
Glavni drenažni ventil (otvoren)
Glavni kontrolni ventil (zatvoren)
Voda pod pritiskom
Vazduh - otvoren prema atmosferi
Vazduh - pod pritiskom

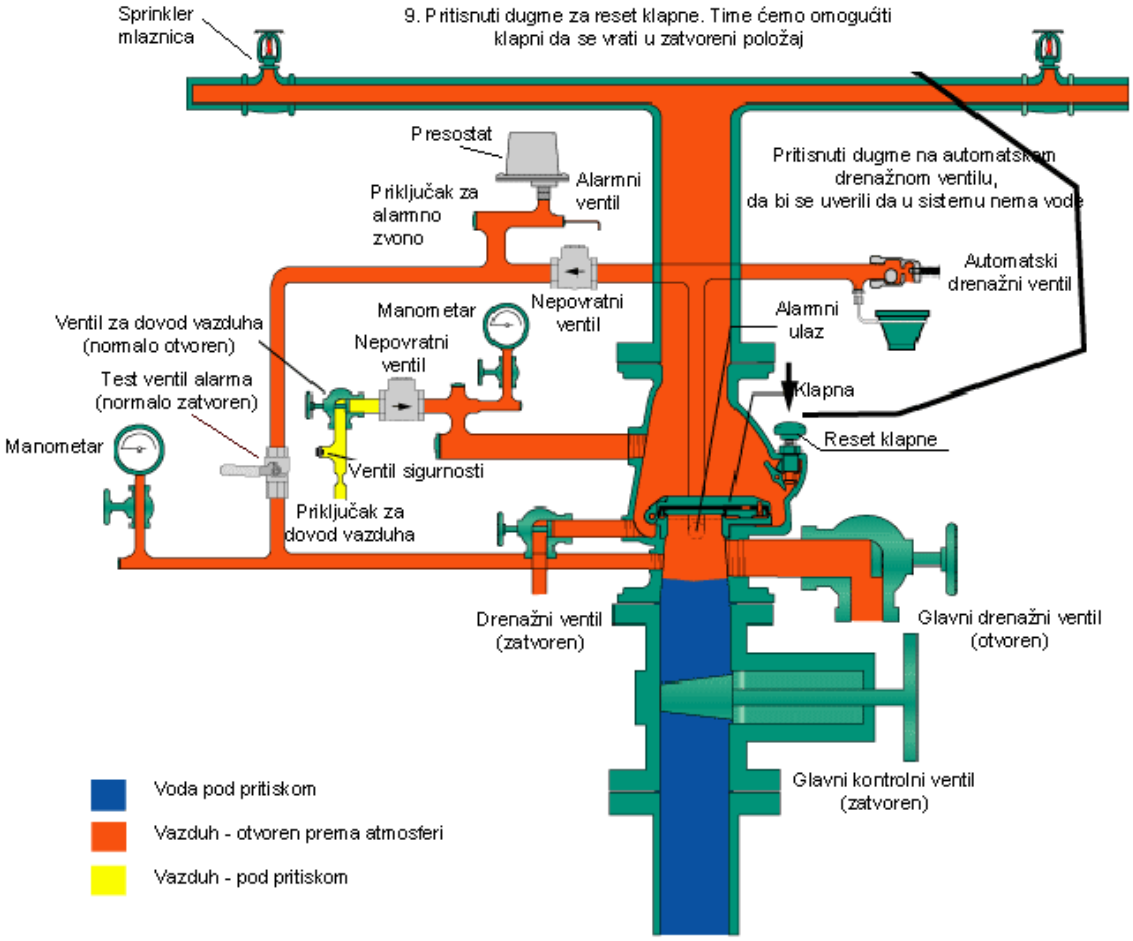
Sprinkler mlaznica
9. Pritisnuti dugme za reset klapne. Time ćemo omogućiti klapni da se vrati u zatvoreni položaj
Presostat
Priključak za alarmno zvono
Alarmni ventil
Pritisnuti dugme na automatskom drenažnom ventilu, da bi se uverili da u sistemu nema vode
Automatski drenažni ventil
Manometar
Nepovratni ventil
Alarmni ulaz
Ventil za dovod vazduha (normalo otvoren)
Nepovratni ventil
Test ventil alarma (normalo zatvoren)
Klapna
Manometar
Reset klapne
Ventil sigurnosti
Priključak za dovod vazduha
Drenažni ventil (zatvoren)
Glavni drenažni ventil (otvoren)
Glavni kontrolni ventil (zatvoren)
Voda pod pritiskom
Vazduh - otvoren prema atmosferi
Vazduh - pod pritiskom

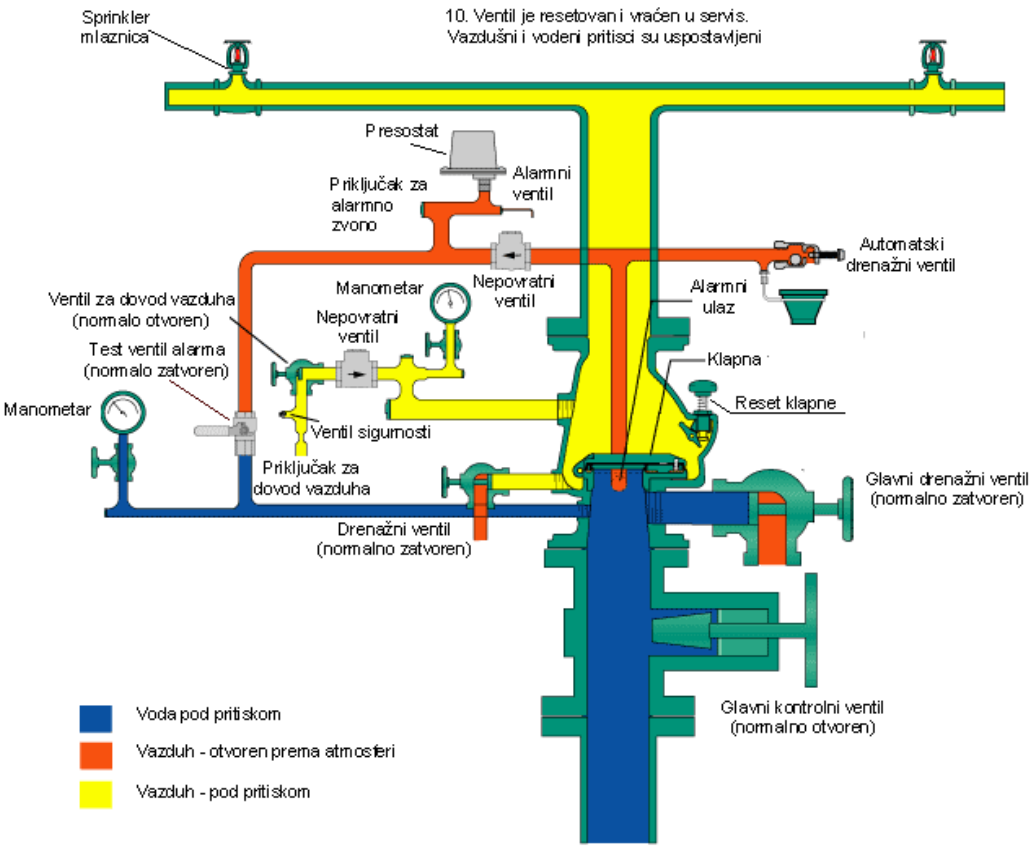
Sprinkler mlaznica
10. Ventil je resetovan i vraćen u servis. Vazdušni i vodeni pritisci su uspostavljeni
Presostat
Priključak za alarmno zvono
Alarmni ventil
Automatski drenažni ventil
Manometar
Nepovratni ventil
Alarmni ulaz
Ventil za dovod vazduha (normalo otvoren)
Nepovratni ventil
Test ventil alarma (normalo zatvoren)
Klapna
Manometar
Reset klapne
Ventil sigurnosti
Priključak za dovod vazduha
Glavni drenažni ventil (normalno zatvoren)
Drenažni ventil (normalno zatvoren)
Glavni kontrolni ventil (normalno otvoren)
Voda pod pritiskom
Vazduh - otvoren prema atmosferi
Vazduh - pod pritiskom

1.2 PROGRAM KONTROLE I OSIGURANJA KVALITETA

OPŠTI USLOVI

1. Prije ustupanja izgradnje investitor utvrđuje podobnost izvođača radova, a zatim ustupa izgradnju objekta nadmetanjem, prikupljanjem ponuda ili neposrednom pogodbom.
2. Investitor i izvođač radova zaključuju Ugovor o izvođenju radova, koji sadrži sledeće:
   - rok početka i rok završetka radova,
   - način naplate izvršenih radova i ugovorene penale,
   - garantni rok,
   - nadzor investitora nad izvođenjem postrojenja,
   - obaveze izvođača da postrojenje izradi prema odobrenom projektu i u skladu sa postojećim standardima, tehničkim uputstvima i normama.

3. Izgradnja se može započeti tek kada investitor pribavi odobrenje za izgradnju objekta.
4. Investitor je dužan da izvođača radova uvede u posao, što naročito obuhvata:
   - predaju gradilišta i prava pristupa gradilištu;
   - obezbeđenje priključaka za struju i vodu, goriva i sl.
   - predaju tehničke dokumentacije;
   - predaju odobrenja za izgradnju objekta;
   - obezbeđenje sredstava za finansiranje izgradnje objekta i plaćanje obaveza, sa pružanjem dokaza o tome.

5. O uvođenju izvođača radova u posao sastavlja se poseban zapisnik i to se konstatuje u građevinskom dnevniku.
6. Izvođač radova vodi na propisan način građevinski dnevnik i građevinsku knjigu, u koje unosi podatke o toku i načinu izgradnje objekta.
7. Izvođač radova prijavljuje gradilište organu uprave, nadležnom za poslove građevinske inspekcije, najmanje 8 dana prije namjeravanog početka izvođenja radova.
8. Izvođač radova je dužan da blagovremeno i detaljno prouči projekat na osnovu koga se izvode ugovoreni radovi i, saglasno pravilima struke, ispita pravilnost tehničkih rešenja.
9. Investitor je dužan da izvođaču pruži tražena objašnjenja o nedovoljno jasnim detaljima tehničke dokumentacije.
10. Izvođač radova nema pravo da mijenja tehničku dokumentaciju. Ako uoči nedostatke u njoj, dužan je da o tome blagovremeno obavijesti investitora.
11. Tehnička dokumentacija može da se mijenja samo uz pristanak investitora i projektanta.
12. Izvođač radova je dužan da pregleda objekat i utvrdi da li su i kako su prema projektu izvedeni svi građevinski radovi, koji su u vezi sa izvođenjem ove instalacije.
13. Ukoliko postoje znatna odstupanja, izvođač je dužan da nedostatke pismeno prijavi investitoru i da traži od investitora prilagođenje projekta.
14. Izvođač radova u toku radova treba:
   - da izvodi radove prema tehničkim propisima, normativima i standardima, koji važe za predmetne instalacije;
   - da ugrađuje materijal koji odgovara propisanim standardima, odnosno koji ima atest izdat od strane stručne organizacije ovlašćene za ispitivanje tog materijala da blagovremeno preduzima mjere za sigurnost objekta, radova, opreme, uređaja i instalacija, radnika, prolaznika, saobraćajnih sredstava, susjednih objekata i okoline;
   - da se pridržava projekata na osnovu kojih je izdato odobrenje za izgradnju objekta;
   - da uredno održava gradilište;

- da svojom kontrolom obezbijedi da se radovi izvode u skladu sa ovim zahtjevima, kako bi se izbjegle štetne posledice, koje se mogu javiti usled nepravilnosti pri izgradnji objekta.

15. Izvođač je dužan da upozori investitora na uočene/utvrđene nedostatke materijala i opreme koji su predvođeni projektom, kao i materijala i opreme koju je investitor nabavio/odabrao.
16. Izvođač je dužan da pruži dokaze o kvalitetu upotrebljenog materijala, opreme i izvedenih radova, kao i da investitoru omogući kontrolu.
17. U toku izvođenja radova izvođač je dužan da primijećene nedostatke otkloni u datom roku.
18. Ugovarač je dužan da blagovremeno obavijesti drugog ugovarača o okolnostima od uticaja na ispunjenje ugovora.
19. Za sve naknadne i nepredviđene radove koji nijesu ugovoreni, a investitor zahtijeva da se izvedu, izvođač će podneti dopunsku ponudu, posle čijeg prihvatanja se radovi mogu izvoditi.
20. Stručni nadzor investitora:

- investitor vrši stručni nadzor nad radovima izvođača radi provjeravanja i obezbjeđenja njihovog urednog obavljanja, naročito u pogledu vrsta, količina i kvaliteta radova, materijala i opreme i previđenih rokova;
- stručni nadzor vrši lice koje investitor odredi za nadzornog organa, pri čemu o njegovim ovlašćenjima obavještava izvođača;
- izvođač je dužan da investitoru omogući vršenje stručnog nadzora;
  sve primjedbe nadzornog organa saopštavaju se u pismenoj formi, preko dnevnika.

21. Osiguranje, uskladištenje i čuvanje opreme i materijala:

- izvođač radova snosi troškove osiguranja opreme, materijala i radova od uobičajenih rizika, do njihove vrednosti;
- izvođač je dužan da opremu i materijal uskladišti, čuva i održava do ugrađivanja;
- izvođač snosi troškove obezbjeđenja i čuvanja izvedenih radova i ugrađene opreme i materijala i rizik njihovog oštećenja, uništenja, odnošenja i propadanja.

22. Pripremni i završni radovi:

- izvođač je dužan da o svom trošku organizuje gradilište, izgradi privremene objekte za smeštaj opreme, materijala, alata, radionice i radne snage, kao i da obezbijedi potrebnu mehanizaciju i prevoz radnika i sl.
- izvođač je dužan da o svom trošku preda investitoru projekat izvedenih radova, koji obuhvata sve izmjene i dopune koje su uslijedile u toku izvođenja radova, u broju primjeraka prema ugovoru;
- po definitivno izvedenim radovima, izvođač je dužan da o svom trošku izradi šeme i uputstva za rukovanje i održavanje cijele instalacije ili postrojenja, koji su ovjereni od strane projektanta, i da ih preda investitoru, u broju primjeraka prema ugovoru;
- po završenim radovima izvođač je dužan da o svom trošku povuče svoje radnike sa gradilišta, ukloni preostali materijal, opremu i sredstva za rad, kao i privremene objekte koje je sagradio i očisti objekat i gradilište.

23.Garancija za kvalitet radova

- garantni rok za izvedene radove iznosi 2 (dve) godine, ako ugovorom nije drugačije određeno;
- izvođač garantuje da su izvedeni radovi, u vrijeme primopredaje, u skladu sa ugovorom, propisima i pravilima struke, i da nemaju mana koje umanjuju njihovu vrijednost ili podobnost za redovnu upotrebu, odnosno namjenu;
- garantni rok počinje da teče od dana primopredaje izvedenih radova;
- za ugrađenu opremu važi garancija proizvođača opreme, s tim što je izvođač dužan da svu dokumentaciju o garancijama, zajedno sa uputstvima za upotrebu, pribavi i preda investitoru. Ako je investitor nabavio opremu, dužan je da sam pribavi navedenu dokumentaciju za nju;
- u toku garantnog roka izvođač je dužan da o svom trošku otkloni u primjerenom roku sve nedostatke koji su nastupili usled toga što se izvođač nije pridržavao svojih obaveza u pogledu kvaliteta radova i materijala;

- ako izvođač ne otkloni nedostatke u primjerenom roku koji mu investitor odredi, investitor može to da povjeri drugom na račun izvođača radova;
- izvođač nije dužan da otkloni one nedostatke koji su nastali kao posledica nestručnog rukovanja i upotrebe, odnosno nenamjenskog korišćenja instalacije.

24. Primopredaja i konačni obračun izvedenih radova

- po završetku radova izvođač obaveštava investitora da su radovi koji čine predmet ugovora završeni;
- na zahtjev investitora ili izvođača radova, nadležni organ formira komisiju za tehnički pregled izvedenih radova;
- po obavljenom tehničkom pregledu, nadležni organ donosi rešenje o upotrebi objekta, a zatim se pristupa primopredaji objekta i izvedenih radova;
- po primopredaji izvedenih radova vrši se konačni obračun, kojim se raspravljaju odnosi između investitora i izvođača radova i utvrđuje izvršenje međusobnih obaveza;
- konačnim obračunom se obuhvataju svi radovi izvedeni na osnovu ugovora,

uključujući viškove i manjkove radova, kao i nepredviđene i naknadne radove;
svaki ugovarač snosi troškove svog učešća u izradi konačnog obračuna.

Ovi pogodbeni uslovi su sastavni deo glavnog projekta i u svemu su obavezni za izvođača radova, sem ukoliko nije drugačije regulisano ugovorom između investitora i izvođača.

25. Svi ostali odnosi između investitora i izvođača radova regulišu se ugovorom.

TEHNIČKI USLOVI ZA SPRINKLERSKE INSTALACIJE

UPUTSTVO ZA IZVOĐENJE

1. Cijelu instalaciju treba montirati prema ovom projektu po dobijanju saglasnosti od nadležnog organa.
2. Sve cijevi, nosače cevovoda i opremu prije montaže treba besprekorno očistiti i zaštititi osnovnom bojom.
3. Proveriti nečistoću cijevi i sa unutrašnje strane, te ukoliko nijesu dovoljno čiste, očistiti ih čeličnom četkom.
4. Svi elementi cijevi, armatura i druga oprema prije ugradnje treba da posjeduje atestiranu dokumentaciju i to cijevi na 16 bara, a armaturu na 10 bara.
5. Spajanje cjevovoda vršiti zavarivanjem i navojnim spojevima.
6. Posle završetka kompletne montaže izvršiti probu instalacije na hidraulični pritisak. Instalaciju treba ispitati na pritisak veći za 50% od radnog pritiska.
7. Probu na traženi pritisak obaviti na sledeći način:
   Cijevna mreža je zatvorena sa šprinkler mlaznicama, a na drugom kraju zatvoriti ventil za dovod vode iz mreže.
   - Mrežu napuniti vodom i ozračiti.
   - Ručnom pumpom ostvariti pritisak od 15 bar ili 50% veći od radnog pritiska, koji god od ta dva bude veći. Ovaj pritisak držati 24 časa i kontrolisati eventualne padove pritiska.

   Instalacija je zadovoljila hidrauličnu probu kada u traženom vremenu od 24 časa nije došlo do pada pritiska.
8. Po završetku probe obavezno napraviti zapisnik koji se čuva kao trajni dokument.
9. Posle završene montaže i probe instalacije na hidraulični pritisak, instalaciju ofarbati završnom bojom.
10. Na vidnom mjestu postaviti tablicu sa nadpisom firme izvođača sa godinom montaže.

PROBNI RAD, ODRŽAVANJE, NAČIN ISPITIVANJA I POVREMENA KONTROLA ISPRAVNOSTI INSTALACIJE

1. Po završetku montaže i ispitivanja instalacije na hidraulički pritisak treba izvršiti funkcionalnu probu.
2. Funkcionalnu probu vršiti uz prisustvo prestavnika investitora i prestavnika izvođača radova. Predstavnik investitora treba da bude nadzorni organ, a predstavnik izvođača radova šef gradilišta.
   Probu uređaja izvršiti na sledeći način:
   - potpaljivanjem sprinkler mlaznice,
   - otvaranjem ventila za probu na ventilskoj stanici.

   U prvom slučaju prilikom probe treba da se postigne sledeće:
   a) isticanje vode na sprinkler mlaznici u raspršenom stanju,
   b) za par desetina sekundi oglašavanje hidrauličkog zvona i slanja u glavni komandni centar,
   c) da je uređaj aktiviran,

   U drugom slučaju otvaranjem ventila za probu na ventilskoj stanici treba da se postigne sledeće:
   Ponavljaju se stavke a), b), i c) u prethodom slučaju.
3. Posle izvršene probe sačiniti zapisnik koji će potpisati ovlašćena lica i čuvati kao trajni dokument. Zapisnik dostaviti na uvid tehničkoj komisiji za prijem.
4. Kada je završeno gašenje onda se uređaj stavlja u mobilno stanje. Prvo se isključuje kompresor, zatim se zatvara dovodni ventil, zamenjuje se sprinkler mlaznica, a zatim se voda ispušta iz mreže. Kada je mreža prazna, onda se sprinkler stanica - sprinkler ventil dovodi u ravnotežni položaj. Zatim se uključuje kompresor za održavanje pritiska vazduha u cevovodu nizvodno od klapne sprinkler ventila.
5. Periodični pregledi obavljaju se u određenim vremenskim razmacima, a odnose se na sledeće:
   - proba funkcionalnosti,
   - čišćenje instalacije od eventualnih nečistoća,
   - zamjena ventila ili spoja koji curi,
   - čišćenje staklenih ampula na sprinkler mlaznicama.
6. Proba funkcionalnosti kompletnog sistema vrši se na period do jedne godine i to sve u funkciji ostalog održavanja.

ČIŠĆENJE INSTALACIJE

1. Važno je da voda u instalaciji bude čista (bez mehaničkih nečistoća) kako ne bi došlo do začepljenja klapni i dr.
2. Čišćenje instalacije obaviti godišnje.
3. Sve ventile podmazati i spojeve koji cure dotegnuti i prekontrolisati.
4. Staklene ampule obavezno očistiti od prljavštine jednom u tri meseca.

PRILOG SA UPUTSTVOM ZA KORIŠĆENJE I ODRŽAVANJE OPREME

UPUTSTVO ZA RUKOVANJE I ODRŽAVANJE

A. STARTOVANJE UREĐAJA U RAD

a) Zatvoriti glavni kontrolni ventil.
b) Uključiti kompresor i napuniti cevovod vazduhom (pritisak vazduha mora biti po preporuci proizvođača sprinkler suvog ventila).
c) Pritisnuti dugme "reset klapne".
d) Proveriti pritisak na manometrima otvaranjem njihovih ventila.
e) Otvoriti glavni kontrolni ventil.

Napomena: svi drenažni i test ventili moraju biti zatvoreni.

B. DOVOĐENJE UREĐAJA U ISPRAVNOST NAKON POŽARA

a) Zatvoriti glavni kontrolni ventil.
b) Isključiti kompresor.
c) Ispustiti vodu otvaranjem svih drenažnih ventila.
d) Zatvoriti drenažni ventil, ali glavni drenažni ventil ostaviti otvoren.
e) Zameniti aktivirane sprinkler mlaznice, mlaznicama istog tipa.
f) Pritisnuti dugne za reset klapne.
g) Zatvoriti glavni drenažni ventil.
h) Uključiti kompresor i napuniti cevovod vazduhom (pritisak vazduha mora biti po preporuci proizvođača sprinkler suvog ventila)
i) Otvoriti glavni kontrolni ventil.

C. U SLUČAJU LAŽNOG AKTIVIRANJA

Procedura je ista kao i za "dovođenje uređaja u ispravnost nakon požara", ali treba izostaviti poziciju e), zato što se ni jedna mlaznica neće aktivirati u slučaju lažnog aktiviranja.

D. PROVERA ALARMIRANJA

a) Otvoriti test ventil alarma.
b) Posle nekoliko sekundi će se oglasiti alarm.
c) Pustiti alarm da radi minimum 30 sekundi.
d) Zatvoriti test ventil alarma.

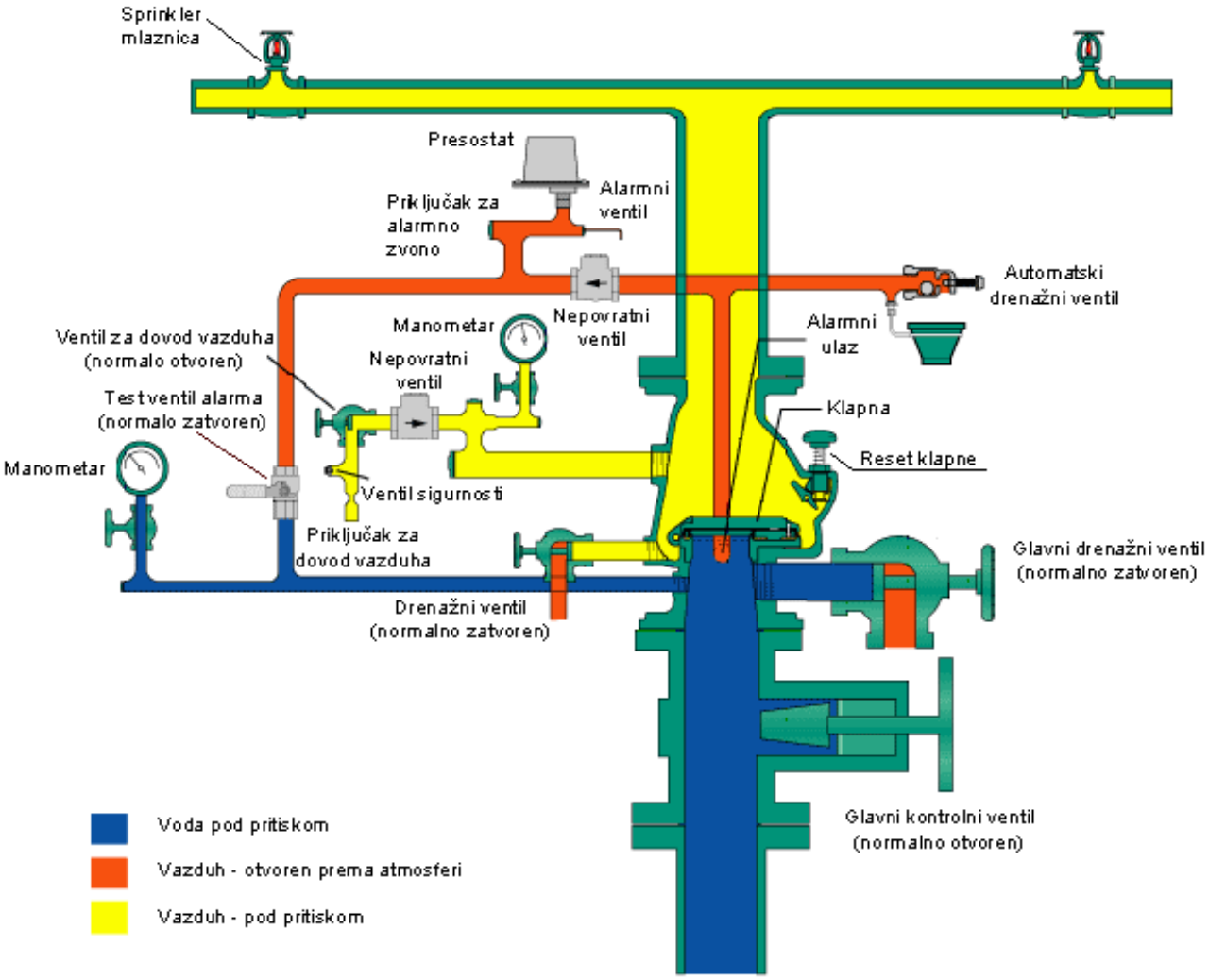

E. OSTALE MJERE ODRŽAVANJA

Svakodnevno kontrolisati:

- Otvorenost ventila Poz.1 i Poz.5
- Pritisak ispred i iza šprinkler ventila na manometrima.

Nedjeljno kontrolisati:

- Probni alarm na svakoj alarmnoj stanici sa kontrolom mehaničkih i električnih alarmnih uređaja.
- Pozicija spremna za rad na svim armaturama za zatvaranje
- Sposobnost funkcionisanja automatskih i ručnih uređaja za startovanje pumpi

Mjesečno kontrolisati:

- Funkcionalna spremnost pumpi i njihovih motora. Pumpni agregat treba da se podvrgne probnom radu pri nazivnom kapacitetu u trajanju od 15 minuta.
- Funkcionalna spremnost automatike dizel agregata
- Funkcionalna proba kontrolnih uređaja
- Stanje mreže cjevovoda

Polugodišnje:

- Pregled cjelokupnog uređaja od strane ovlašćene institucije
- Ventilske sprinkler stanice
- Otvaranje i zatvaranje svih ventila

Svake godine kontrolisati:

- Pregled alarmnog ventila
- Čišćenje filtera i otvora
- Podmazivanje alarmnog zvona.
  Stanje rezervoara

Svake druge godine kontrolisati:

- Demontirati sve ventile, zasune i alarmni ventil i pregledati ih
- Izvršiti probno aktiviranje uređaja isceniranjem požara ispod sprinklera.

Posle dvadeset pet godina:

- Kontrola cjelokupne mreže cjevovoda. Izvršiti probu razvodne mreže hladnim vodenim pritiskom od 15 bara u trajanju od 24 časa.

Odgovorni inženjer
Vuk Kasalica, dipl. ing. maš.

1.3 UPUTSTVO ZA UPRAVLJANJE GRAĐEVINSKIM OTPADOM, ODNOSNO OPASNIM OTPADOM KOJI NASTAJE TOKOM GRAĐENJA, KORIŠĆENJA ODNOSNO UKLANJANJANJA OBJEKTA, U SKLADU SA POSEBNIM PROPISOM

U skladu sa članom 26, 27, 28 Zakona o upravljanju otpadom (Sl.list CG br. 64/11 od 29.12.2011. godine), Investitor je u obavezi da Agenciji za zaštitu životne sredine, kao nadležnom organu, podnese zahtjev za davanje saglasnosti na Plan upravljanja otpadom.

Član 27 Zakona o upravljanju otpadom propisuje sadržaj plana i to:

- vrstu, količinu i mjesto nastanka pojedinih vrsta otpada na godišnjem nivou, u skladu s katalogom otpada,
- period tokom kojeg će se obavljati postupak ili aktivnosti koje kao rezultat imaju proizvodnju otpada,
- mjere za sprječavanje proizvodnje otpada ili smanjenje količina otpada i njegovog negativnog uticaja na životnu sredinu,
- način upravljanja otpadom, koji naročito obuhvata sakupljanje, privremeno skladištenje (lokacija), transport i obradu otpada.

Plan se radi na period od 3 godine shodno Zakonu o upravljanju otpadom („Sl.list CG" broj 64/11) nakon čega se radi drugi plan. Plan upravljanja otpadom stupa na snagu danom usvajanja od strane Agencije za zaštitu životne sredine Crne Gore.

Građevinski otpad nastaje prilikom izrade građevinskih proizvoda ili poluproizvoda, gradnje, rušenja i rekonstrukcije objekata.

Materijali koji se javljaju u građevinskom otpadu zavise od radova koji se izvode i mogu biti:

- zemljani radovi/iskop tla – zemlja, pijesak, šljunak, glina, ilovača, kamen;
- niskogradnja - bitumen (asfalt) ili cementom vezani materijal, pijesak, šljunak, drobljeni kamen;
- visokogradnja – beton, opeka, gips, plinobeton, prirodni kamen;
- miješani građevinski otpad – drvo, plastika, papir, karton, metal, kablovi, boje i lakovi, šut.

Sastav građevinskog otpada zavisi od toga da li se ruši postojeći ili gradi novi objekat, kao i od područja gdje se gradi – pored opeke i betona koji su sve više zastupljeni u savremenoj gradnji, na jugu Crne Gore kao građevinski materijal više je zastupljen kamen, a na sjeveru drvo.

Vrste građevinskog otpada sadržane su u Pravilniku o vrstama i metodama ispitivanja otpada u okviru indeksa 17. i čine ga građevinski otpad i otpad nastao rušenjem (uključujući i iskopano zemljište sa kontaminiranih lokacija):

17 01 Beton, cigla, pločice i keramika
17 01 01 beton
17 01 02 cigle
17 01 03 pločice i keramika
17 01 06*mješavina ili pojedine frakcije betona, cigle, pločice i keramika koji sadrže opasne supstance
17 01 07 mješavine ili pojedine frakcije betona, cigle, pločice i keramika drugačiji od 17 01 06*
17 02 Drvo, staklo i plastika
17 02 01 drvo
17 02 02 staklo
17 02 03 plastika
17 02 04* staklo, plastika i drvo koji sadrže opasne supstance ili su kontaminirani opasnim supstancama

17 03 Bituminozna mješavina , katran i proizvodi sa katranom
17 03 01*bituminozna mješavina koja sadrži katran od uglja
17 03 02 bituminozne mješavine drugačije od 17 03 01*
17 03 03*katran od uglja i proizvodi sa katranom

17 04 Metali (ukljucujući i njihove legure)
17 04 01 bakar, bronza,mesing
17 04 02 aluminijum
17 04 03 olovo
17 04 04 cink
17 04 05 gvožđe i čelik
17 04 06 kalaj
17 04 07 miješani metali
17 04 09* otpad od metala kontaminiran opasnim supstancama
17 04 10* kablovi koji sadrže ulje, katran od uglja i druge opasne supstance
17 04 11 kablovi drugačiji od 17 04 10*

17 05 Zemljište (ukljucujući zemljište sa kontaminiranih lokacija), kamen i muljeviti otpad iskopan bagerom
17 05 03*zemljište i kamen koji sadrže opasne supstance
17 05 04 zemljište i kamen drugačiji od 17 05 03*
17 05 05*muljeviti otpad iskopan bagerom koji sadrži opasne supstance
17 05 06 muljeviti otpad iskopan bagerom drugačiji od 17 05 05*
17 05 07* otpad koji spada sa gusjenica koji sadrži opasne supstance
17 05 08 otpad koji spada sa gusjenica drugačiji od 17 05 07*

17 06 Izolacioni materijali i građevinski materijali koji sadrže azbest
17 06 01* izolacioni materijali koji sadrže azbest
17 06 03* ostali izolacioni materijal koji se sastoji od ili sadrži opasne supstance
17 06 04 izolacioni materijali drugačiji od 17 06 01* i 17 06 03*
17 06 05* građevinski materijali koji sadrže azbest

17 08 Gradjevinski materijal na bazi gipsa
17 08 01* građevinski materijal na bazi gipsa kontaminiran opasnim supstancama
17 08 02 građevinski materijal na bazi gipsa drugačiji od 17 08 01*

17 09 Ostali otpad od gradjenja i rušenja
17 08 01*otpad od građenja i rušenja koji sadrži živu
17 08 02*otpad od građenja i rušenja koji sadrži PCB (npr. zaptivači koji sadrže PCB, podovi na bazi smola koji sadrže PCB, glazure koje sadrže PCB i kondenzatori koji sadrže PCB)
17 08 03*ostali otpad od građenja i rušenja (uključujući miješane otpade) koji sadrži opasne supstance
17 08 04 miješani otpad od građenja i rušenja drugačiji od 17
09 01*, 17 09 02* i 17 09 03*

Opasni otpad u katalogu otpada klasifikuje se prema kategoriji, tipu opasnog otpada, koji se određuje na osnovu svojstava otpada ili dijela djelatnosti u kojima nastaje otpad u skladu sa Prilogom 2 pravilnika. U katalogu otpada opasni otpad označava se sa (*).

Obrada otpada obuhvata postupke prerade i odstranjivanja otpada.

Prerada otpada vrši se prema postupcima datim u Prilogu 5 pravilnika.

Odstranjivanje otpada vrši se prema postupcima datim u Prilogu 6 pravilnika.

- **POSTUPCI PRERADE OTPADA**

Postupci prerade otpada kojima se obezbjeđuje da odloženi otpad ne ugrožava zdravlje ljudi i životnu sredinu su:
R1 – Korišćenje otpada kao goriva ili na drugi način za proizvodnju energije (*);
R2 – Prerada/regeneracija rastvarača;
R3 – Recikliranje/prerada organskih supstanci koje se ne koriste kao rastvarači (uključujući kompostiranje i druge načine biološke obrade);
R4 – Recikliranje/prerada metala i jedinjenja metala;
R5 – Recikliranje/prerada ostalih neorganskih materija;
R6 – Regeneracija kisjelina ili baza;
R7 – Procesuiranje komponenata koje se koriste za ublažavanje zagađenja;
R8 – Procesuiranje komponenata katalizatora;
R9 – Ponovno rafinisanje korišćenog ulja ili drugo ponovno korišćenje prethodno korišćenog ulja;
R10 – Izlaganje otpada procesima u zemljištu koji daju korist za poljoprivredu ili ekološki napredak;
R11 – Korišćenje ostataka dobijenih bilo kojom operacijom pod brojevima R1 do R10;
R12 – Razmjena otpada za podvrgavanje bilo koje od operacija pod brojevima R1 do R11 ;
R13 – Skladištenje otpada namijenjenog za bilo koju operaciju od R1 do R12 (isključujući privremena skladištenja na mjestima gdje je otpad proizveden radi sakupljanja otpada).

- **POSTUPCI ODSTRANjIVANjA OTPADA**

Postupci odstranjivanja otpada odstranjivanja kojima se obezbjeđuje da odstranjeni otpad ne ugrožava zdravlje ljudi i životnu sredinu su:
D1 – Odlaganje u zemljištu ili na zemljištu (npr. deponije);
D2 – Izlaganje procesima u zemljištu (npr. biodegradacija tečnosti ili taložnih otpada u zemljištu);
D3 – Duboko ubrizgavanje (npr. ubrizgavanje otpada koji se mogu pumpati u bunare, slane kupole prirodnih depoa);
D4 – Površinsko zatvaranje (npr. stavljanje tečnih ili taložnih otpada u jame, basene ili lagune);
D5 – Posebno projektovane deponije (npr. stavljanje u linearno poređane zasebne ćelije koje su poklopljene i međusobno izolovane i izolovane od životne sredine);
D6 – Ispuštanje u vodu, osim u mora, odnosno okeane ;
D7 – Ispuštanje u mora, odnosno okeane, uključujući umetanje u morsko dno ;
D8 – Biološki tretman koji nije naznačen u ovoj listi, a dovodi do nastanka konačnih jedinjenja ili mješavinama koje se odbacuju bilo kojom od operacija od D1 do D7 i D9 do D12;
D9 – Fizičko – hemijska obrada koja nije naznačena u ovoj listi, a dovodi do nastanka konačnih jedinjenja ili mješavinama koje se odbacuju bilo kojom od operacija od D1 do D8i D10 do D12 (npr. isparavanje,sušenje, kalcinacija) ;
D10 – Spaljivanje na tlu ;
D11 – Spaljivanje na moru;
D12 – Trajno skladištenje (npr. smještanje kontejnera u rudnik);
D13 – Miješanje i sjedinjavanje prije podvrgavanja bilo kojoj od operacija od D1 do D12;
D14 – Prepakivanje prije podvrgavanja bilo kojoj od operacija od D1 do D13;
D15 – Skladištenje koje prethodi bilo kojoj od operacija od D1 do D14 (isključujući privremena skladištenja na mjestima gdje je otpad proizveden radi sakupljanja otpada)

- **PREPORUČENI NAČIN KORIŠTENJA/RECIKLAŽE GRAĐEVINSKOG OTPADA**

Veliki dio građevinskog otpada se može reciklirati. Većina frakcija materijala generiranog za vrijeme demolicije zgrada je preradivo. Reciklaža podrazumijeva drobljenje opeke i betona u sekundarne sirovine.

Reciklaža građevinskog otpada doprinosi uštedi energije i smanjenju prostora potrebnog za odlaganje i smanjuje upotrebu prirodnih resursa. S tim u vezi a za predmetni projekat preporučuju se sledeće mjere – uputstva za upravljanje gradjevinskim otpadom:

Broj otpada	Vrsta otpada	Moguće korištenje/reciklaža
17	Građevinski otpad i otpad od rušenja objekata (uključujući iskopanu zemlju sa onečišćenih/kontaminiranih lokacija)	
17 01	beton, opeka/cigle, crjepovi/pločice i keramika	
17 01 01	beton	Konstrukcija puteva, uređenje terena
17 01 02	opeka/cigle	Cijele opeke se mogu koristiti za prvobitnu namjenu, za vanjsko uređenje, Konstrukcija puteva
17 01 03	crjepovi/pločice i keramika	Crijep se može ponovno koristiti Drobljenje za bazu za puteve Zatrpavanje terena Odlaganje na deponiju za inertni materijal
17 01 06*	mješavine ili odvojene frakcije betona, opeke, crijepova/pločica i keramike koje sadrže opasne materije	Firma koja ima dozvolu za zbrinjavanje opasnog otpada
17 01 07	mješavine betona, opeke, crijepova/pločica i keramike koje nisu navedene pod 17 01 06	Drobljenje za bazu za puteve, za zatrpavanje i uređenje terene
17 02	drvo, staklo i plastika	
17 02 01	drvo	Neoštećeni prozori i vrata mogu se ponovno koristiti Drveće i grmlje od uređenja terena se može kompostirati Može se koristiti kao gorivo
17 02 02	staklo	Staklo se može reciklirati za proizvodnju novog stakla ili se može drobljenjem proizvoditi podloga za puteve
17 02 03	plastika	reciklaža
17 02 04*	staklo, plastika i drvo koji sadrže ili su onečišćeni/kontaminirani opasnim materijema	Firma za zbrinjavanje opasnog otpada
17 03	mješavine bitumena, (ugljeni) katran i proizvodi koji sadrže katran	
17 03 01*	mješavine bitumena koje sadrže ugljeni katran	Firma koja ima dozvolu za zbrinjavanje opasnog otpada
17 03 02	mješavine bitumena koje nisu navedene pod 17 03 01	Firma koja ima dozvolu
17 03 03*	(ugljeni) katran i proizvodi koji sadrže katran	Firma koja ima dozvolu
17 04	metali (uključujući njihove legure)	
17 04 01	bakar, bronza, mesing	Predati firmi koja se bavi reciklažom
17 04 02	aluminijum	Predati firmi koja se bavi reciklažom
17 04 04	cink	Predati firmi koja se bavi reciklažom
17 04 05	željezo i čelik	Predati firmi koja se bavi reciklažom
17 04 06	kalaj	Predati firmi koja se bavi reciklažom
17 04 07	miješani metali	Predati firmi koja se bavi reciklažom
17 04 09*	metalni otpad onečišćen/kontaminiran opasnim materijama	Angažovati firmu koja ima dozvolu za postupanje sa opasnim otpadom
17 04 10*	kablovi koji sadrže ulje, (ugljeni) katran i druge opasne materije	Angažovati firmu koja ima dozvolu za postupanje sa opasnim otpadom
17 04 11	kablovi koji nisu navedeni pod 17 04 10	Odlaganje na deponiju
17 05	zemlja (uključujući iskopanu zemlju s onečišćenih/kontaminiranih lokacija), kamenje i iskopana zemlja od rada bagera	
17 05 03*	zemlja i kamenje koji sadrže opasne materije	Angažovati firmu koja ima dozvolu za postupanje sa opasnim otpadom
17 05 04	zemlja i kamenje koji nisu navedeni pod 17 05 03	Zatrpavanje, uređenje terena, pokrivka na deponiji

17 05 05*	iskopana zemlja od rada bagera koja sadrži opasne materije	Uređenje terena, zatrpavanje, poljoprivreda
17 05 06	iskopana zemlja koja nije navedena pod 17 05 05	
17 05 07*	šljunak za pruge koji sadrži opasne materije	Odlaganje na deponiju inertnog materijala
17 05 08	šljunak za pruge koji nije naveden pod 17 05 07	
17 06 01*	izolacioni materijali koji sadrže azbest	Otpad od azbesta odložiti u skladu sa Uputstvom za zbrinjavanje otpada od azbesta
17 06 03*	ostali izolacijski materijali koji se sastoje od ili sadrže opasne materije	Firma koja ima dozvolu za zbrinjavanje opasnog otpada
17 06 04	izolacioni materijali koji nisu navedeni pod 17 06 01 i 17 06 03	Predati firmi koja ima dozvolu za zbrinjavanje opasnog otpada
17 06 05*	građevinski materijali koji sadrže azbest	U slučaju sumnje da građevina predviđena za rušenje sadrži azbest, odmah obustaviti radove izvršiti analize i postupiti prema uputstvima za zbrinjavanje
17 08	građevinski materijal na bazi gipsa	
17 08 01*	građevinski materijal na bazi gipsa onečišćen/kontaminiran opasnim materijema	Firma za zbrinjavanje opasnog otpada
17 08 02	građevinski materijal na bazi gipsa koji nije naveden pod 17 08 01	Odlaganje na deponiju inertnog materijala
17 09	ostali građevinski otpad i otpad od rušenja	
17 09 01*	građevinski otpad i otpad od rušenja koji sadrži živu	Firma za zbrinjavanje opasnog otpada
17 09 02*	građevinski otpad i otpad od rušenja koji sadrži PCB	Mora se angažovati firma koja ima dozvolu za zbrinjavanje opasnog otpada
17 09 03*	ostali građevinski otpad i otpad od rušenja (uključujući miješani otpad) koji sadrži opasne materije	Firma za zbrinjavanje opasnog otpada
17 09 04	miješani građevinski otpad i otpad od rušenja koji nije naveden pod 17 0 01, 17 09 02 i 17 09 03	Odlaganja na odobrenom odlagalištu za inertni otpad

M J E R E

za sprečavanje proizvodnje otpada ili smanjenje količine otpada njegovog negativnog uticaja na životnu sredinu

U cilju smanjenja količina generisanog otpada u poslovanju je potrebno primjenjivati savremene tehnologije, moguća ponovna upotreba sredstava (popravka) i drugo.

Privremena skladišta moraju ispunjavati minimalne uslove gradnje, za svrhu skladištenja otpada, kao što su:

- Nepropusne i otporne podne i zidne površine koje se lako čiste i dezinfikuju,
- Opremljenost vodom i strujom,
- Laka dostupnost skladišta za sakupljanje i unutrašnji transport,
- Opremljenost sredstvima za pranje i dezinfekciju ruku,
- Zaključano, kako bi se onemogućio pristup neovlašćenim licima,
- Ograđeni objekat i dvorišni dio,
- Dobro osvjetljena i provjetravana,
- Stvoreni uslovi za odvojeno sakupljanje otpada i drugo,
- Posude za tečni otpad treba da stoje u tankvanama koje prihvataju otpad u slučaju akcidenta.

1. Program obuke zaposlenih

Upravljanje otpadom će biti efikasno ukoliko se primjenjuje kontinuirana obuka radnika i tehničkog osoblja radi ispunjavanja zahtijeva postavljenih u Planu za upravljanje otpadom. Glavni cilj obuke je da se poveća nivo svijesti o zdravlju, bezbjednosti na radu i problemima zaštite životne sredine.

2. Zaštita i zdravlje na radu

Zaštita i zdravlje na radu i bezbjednost radnika uključuju sljedeće: odgovarajuću obuku, zaštitnu odjeću i opremu, rad sa ispravnim sredstvima rada, djelotvoran program zaštite i zdravlja na radu. Zaposleni koji rukuju ovim otpadom imaju sledeću ličnu zaštitnu opremu:

- Radne kombinezone,
- Zaštitne naočare,
- Zaštitna maska,
- Rukavice za jednokratnu upotrebu,
- Posebnu zaštitnu obuću.

Odgovorni inženjer
Vuk Kasalica, dipl. ing. maš.

1.4 KARAKTERISTIKE I SVOJSTVA MATERIJALA, INSTALACIJA I OPREME

Produktblatt | Wasser – *Product Sheet | Water*

M2-04-00 Teil 5

Ergänzung / *amendment: 07.10* *part 5*

TAV - Sets TMX-F/F
(Station ohne Schieber)
Maße in mm; Gewicht in kg/St.

TAV - Sets TMX-F/F
(set without gate valve)
dimensions in mm; weight in kg/pc

Typ / *type* TAV-TMX	Bezeichnung *designation*	Art.-Nr. *part no.*	Anerkennungen *approvals*	Gewicht *weight*
TAV-Set DN80 TMX-F/F				
Grundausbau *basic equipment*	TAV-Set 80-TMX-F/F-PN16	850009	CE (0786 - CPD - 40030), VdS (G4890031), RUS / GOST-R, MOE	30,7
	TAV-Set 80-TMX-F/F-ÜWA-PN16	850010		31,8
	TAV-Set 80-TMX-F/F-SE2-PN16	850011		38,4
	TAV-Set 80-TMX-F/F-SE2-ÜWA-PN16	850012		39,8
FM	TAV-Set 80-TMX-F/F-FM-PN16	850013	CE (0786 - CPD - 40030), FM	40,5
	TAV-Set 80-TMX-F/F-FM-ÜWA-PN16	850015		41,7
	TAV-Set 80-TMX-F/F-SE2-FM-PN16	850016		48,2
	TAV-Set 80-TMX-F/F-SE2-FM-ÜWA-PN16	850017		49,6
TV	TV-Set 80-TMX-F/F-PN16	850056	CE (0786 - CPD - 40030)	29,1
	TV-Set 80-TMX-F/F-ÜWA-PN16	850057		31,1
TAV-Set DN100 TMX-F/F				
Grundausbau *basic equipment*	TAV-Set 100-TMX-F/F-PN16	850027	CE (0786 - CPD - 40031), VdS (G4910001), RUS / GOST-R, MOE	38,7
	TAV-Set 100-TMX-F/F-ÜWA-PN16	850028		39,8
	TAV-Set 100-TMX-F/F-SE2-PN16	850029		46,4
	TAV-Set 100-TMX-F/F-SE2-ÜWA-PN16	850030		47,8
FM	TAV-Set 100-TMX-F/F-FM-PN16	850031	CE (0786 - CPD - 40031), FM	50,4
	TAV-Set 100-TMX-F/F-FM-ÜWA-PN16	850032		51,5
	TAV-Set 100-TMX-F/F-SE2-FM-PN16	850033		58,1
	TAV-Set 100-TMX-F/F-SE2-FM-ÜWA-PN16	850034		59,5
TV	TV-Set 100-TMX-F/F-PN16	850060	CE (0786 - CPD - 40031)	36,4
	TV-Set 100-TMX-F/F-ÜWA-PN16	850061		38,4
TS	TS-Set 100-TMX/S-F/F-SE2-ÜWA-PN16	850068	VdS (G4930002)	50,4
TAV-Set DN150 TMX-F/F				
Grundausbau *basic equipment*	TAV-Set 150-TMX-F/F-PN16	850045	CE (0786 - CPD - 40032), VdS (G4900056), RUS / GOST-R, MOE	55,7
	TAV-Set 150-TMX-F/F-ÜWA-PN16	850046		56,9
	TAV-Set 150-TMX-F/F-SE2-PN16	850047		63,5
	TAV-Set 150-TMX-F/F-SE2-ÜWA-PN16	850048		64,9
FM	TAV-Set 150-TMX-F/F-FM-PN16	850049	CE (0786 - CPD - 40032), FM	74,7
	TAV-Set 150-TMX-F/F-FM-ÜWA-PN16	850050		75,9
	TAV-Set 150-TMX-F/F-SE2-FM-PN16	850052		82,4
	TAV-Set 150-TMX-F/F-SE2-FM-ÜWA-PN16	850053		83,8
TV	TV-Set 150-TMX-F/F-PN16	850065	CE (0786 - CPD - 40032)	51,7
	TV-Set 150-TMX-F/F-ÜWA-PN16	850066		53,7
TS	TS-Set 150-TMX/S-F/F-SE2-ÜWA-PN16	850070	VdS (G4930003)	65,7

Abkürzungen siehe Seite 2/3 *abbreviations see on page 2/3*

M2_04-00_005
Technische Änderungen ohne vorherige Ankündigung vorbehalten. Alle Rechte vorbehalten.
The contents of this publication are subject to modifications without notice. All rights reserved.

© Viking S.A. | Z.I. Haneboesch | L-4562 Differdange/Niederkorn | www.viking-emea.com |

M2-04-00 Teil 5

Ergänzung / *amendment: 07.10* *part 5*

TAV - Sets TMX-F/F
(Station ohne Schieber)

Maße in mm; Gewicht in kg/St.

Abkürzungen:

TAV-Set ..... Trockenalarmventilstation ohne Schieber
TV-Set ..... Tandemventilstation ohne Schieber
TS-Set ..... Trockenschnellstation ohne Schieber
F/F ..... Flanschanschluss oben und unten
FM ..... FM-Ausführung
PN ..... Nenndruck
ÜWA ..... Überwachung
SE2 ..... Schnellöffner

TAV - Sets TMX-F/F
(set without gate valve)

dimensions in mm; weight in kg/pc

abbreviations:

TAV-Set ..... dry pipe alarm valve set without gate valve
TV-Set ..... tail-end alarm valve set without gate valve
TS-Set .. dry pipe alarm valve set, fast release without gate valve
F/F ..... top and bottom flange connection
FM ..... FM design
PN ..... nominal pressure
Ü ..... monitoring
SE2 ..... accelerator

Bemaßung / *dimensioning*

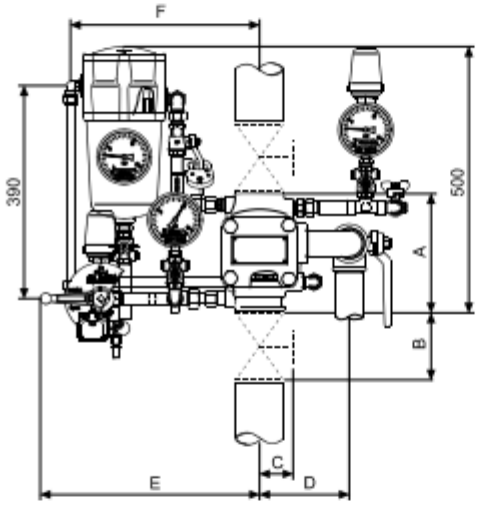

zusätzlich bei FM-Ausführung
Zwischenflansch F/F
additionally for FM design
spool piece F/F

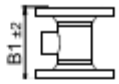

B1	DN80	180 mm
	DN100	190 mm
	DN150	210 mm

Maß / *dimension*			DN80 [mm]	DN100 [mm]	DN150 [mm]
A	-		240	250	280
B	Schieber *gate valve*	FireKing DIN 3352	180	190	210
		AVK DIN 3352			
		FireKing OS&Y	203	229	267
		AVK OS&Y			
C	Schieber *gate valve*	FireKing DIN 3352	332	362	480
		AVK DIN 3352	382	414	540
		FireKing OS&Y	max. 483	max. 568	max. 765
		AVK OS&Y	350 - 429	420 - 524	581 - 736
D	-		173	203	223
E	-		500	525	570
F	-		342	355	382
Tiefe *depth*	Maße von Rohrmitte *dimensions from pipe centre*		nach hinten ca. 300, nach vorne max. C *at the back approx. 300, at the front max. C*		

Technische Änderungen ohne vorherige Ankündigung vorbehalten. Alle Rechte vorbehalten.
The contents of this publication are subject to modification without notice. All rights reserved.

M2-04-00 Teil 5

Ergänzung / *amendment: 07.10* *part 5*

TAV - Sets TMX-F/F
(Station ohne Schieber)

Maße in mm; Gewicht in kg/St.

Instandhaltung: M7-2-04-11
Technische Beschreibung: .....Art.-Nr. 841506 (de/en)
...FM: 841596 (de/en), Leitung AG: 841221 (de/en), TV: 841828 (de/en)
.....TS: 841986 (de/en), Auslöseleitung TS: 841760 (de/en)
Ersatzteile: .....M9-2-04-11, M9-2-04-60 (TS)

Techn. Daten:
zulässiger Betriebsdruck .....max. 16 bar [1)]
Wasserversorgungsdruck .....min. 3,0 bar
Äquivalentlänge DN80 .....4,4 m (Rohr 88,9 x 2,9)
DN100 .....8,0 m (Rohr 114,3 x 3,2)
DN150 .....11,6 m (Rohr 168,3 x 4,0)
Medium .....Wasser, Druckluft
Betriebstemperatur .....max. 60 °C
Flanschanschlussmaße .....DIN 2501
Einbaulage .....senkrecht

[1)] ab 12,5 bar Betriebsdruck ist ein Manometer 0 bis 25 bar wasserversorgungsseitig zu verwenden

Lieferumfang Grundausbau und FM:
Trockenalarmventil TMX-F/F .....M2-04-12 Teil 2
Zubehör TAV-TMX DN80 - 150 841488
Zubehör TAV-TMX ohne ÜWA 826084
mit ÜWA 858633
Zubehör Montagesatz:
- TAV80, TAV80-FM 841482, 848272
- TAV100, TAV100-FM 841484, 848273
- TAV150, TAV150-FM 841485, 848274

(Im Zubehör "Montagesatz TAV / TAV-FM" sind Schrauben und Dichtungen für 3 Flanschverbindungen enthalten.)

zusätzlich bei TAV - Sets mit Schnellöffner (M2-04-13):
- Schnellöffner SE2, SE2 / FM 816890, 840174
- Zubehör Schnellöffner SE2, SE2-ÜWA 841504, 848259

zusätzlich bei FM-Ausführung:
Zwischenflansch DN80 881929
(M2-04-38) DN100 881930
DN150 881942

Lieferumfang Varianten TV und TS:
Variante TV .....siehe M2-04-21 Teil 2 (ohne Schieber)
Variante TS .....siehe M2-04-60 Teil 2 (ohne Schieber)

nicht im Lieferumfang enthalten:
Absperrarmaturen .....M2-04-00 Teil 9
Betriebsanleitung WHB 31 (de) 840302
Bedienungsvorschrift M2-04-40
Trichter 1.1/2 komplett M2-04-08
Entwässerungseinheit für Trockenanlagen M2-04-14
zusätzlich bei TV - Sets:
(bei Bedarf für Alarmuntertellung)
- Druckschalter PMA M2-04-10
- Verschraubung z. B. 344-1/2-Zn 773295

TAV - Sets TMX-F/F
(set without gate valve)

dimensions in mm; weight in kg/pc

maintenance: *M7-2-04-11*
technical description: .....*part no. 841506 (de/en)*
...FM: 841596 (de/en), pipe AG: 841221 (de/en), TV: 841828 (de/en)
.....TS: 841986 (de/en), release pipe TS: 841760 (de/en)
spare parts: .....*M9-2-04-11, M9-2-04-60 (TS)*

technical data:
permissible working pressure .....*max. 16 bar* [1)]
water supply pressure .....*min. 3,0 bar*
equivalent length DN80 .....*4,4 m (pipe 88,9 x 2,9)*
DN100 .....*8,0 m (pipe 114,3 x 3,2)*
DN150 .....*11,6 m (pipe 168,3 x 4,0)*
medium .....*water, compressed air*
operating temperature .....*max. 60 °C*
flange connection dimensions .....*DIN 2501*
installation position .....*vertical*

[1)] *you must use a water supply pressure gauge 0 to 25 bar for operating pressure over 12,5 bar*

included in delivery basic equipment and FM:
dry pipe alarm valve TMX-F/F .....*M2-04-12 part 2*
accessories TAV-TMX DN80 - 150 .....*841488*
accessories TAV-TMX without ÜWA *826084*
with ÜWA *858633*
accessories mounting set:
- TAV80, TAV80-FM *841482, 848272*
- TAV100, TAV100-FM *841484, 848273*
- TAV150, TAV150-FM *841485, 848274*

(in the accessories "mounting set TAV / TAV-FM" screws and gaskets for 3 flange connections are contained)

additionally for TAV - Sets with accelerator (M2-04-13):
- accelerator SE2, SE2 / FM *816890, 840174*
- accessory accelerator SE2, SE2-ÜWA *841504, 848259*

additionally for FM design:
spool piece DN80 .....*881929*
(M2-04-38) DN100 .....*881930*
DN150 .....*881942*

included in delivery variants TV and TS:
variant TV .....*see M2-04-21 part 2 (without gate valve)*
variant TS .....*see M2-04-60 part 2 (without gate valve)*

not included in delivery:
shut-off valves .....*M2-04-00 part 9*
manual WHB 31 (en) *842085*
operating instructions *M2-04-40*
funnel 1.1/2 complete *M2-04-08*
drain unit for dry pipe systems *M2-04-14*
additionally for TV - Sets:
(optionally for alarm subdivision)
- pressure switch PMA *M2-04-10*
- union e.g. 344-1/2-Zn *773295*

M2_(0400_005)
Technische Änderungen ohne vorherige Ankündigung vorbehalten. Alle Rechte vorbehalten.
The contents of this publication are subject to modification without notice. All rights reserved.

© Viking S.A. | Z.I. Haneboesch | L-4562 Differdange/Niederkorn | www.viking-emea.com |

VIKING®	TECHNICAL DATA	MICROMATIC® STANDARD RESPONSE PENDENT SPRINKLER VK102 (K5.6)

The Viking Corporation, 210 N Industrial Park Drive, Hastings MI 49058
Telephone: 269-945-9501 Technical Services: 877-384-5464 Fax: 269-818-1680 Email: techsvcs@vikingcorp.com
Visit the Viking website for the latest edition of this technical data page www.vikinggroupinc.com

1. DESCRIPTION

The Viking Micromatic® Standard Response Pendent VK102 Sprinkler is a small, thermosensitive, glass-bulb spray sprinkler available in several different finishes and temperature ratings to meet design requirements. The special Polyester, and Electroless Nickel PTFE (ENT) coatings can be used in decorative applications where colors are desired. In addition, these coatings have been investigated for installation in corrosive environments and are listed/approved as indicated in the Approval Charts.

Viking standard response sprinklers may be ordered and/or used as open sprinklers (glass bulb and pip cap assembly removed) on deluge systems. Refer to Ordering Instructions.

2. LISTINGS AND APPROVALS

cULus Listed: Category VNIV

FM Approved: Classes 2001, 2002, 2015, 2017, 2043

VdS Approved: Certificate G414006 & G414004

LPCB Approved

CE: Standard EN 12259-1, DOP_Sprinklers_LPCB_5-2-19 & DOP_VK102WAX_2-12-19

MED Certified: Standard EN 12259-1, EC-certificate 0832-MED-1003

China Approval: Approved according to China GB standard.

NOTE: Other International approval certificates are available upon request.
Refer to Approval Charts and Design Criteria for listing and approval requirements that must be followed.

3. TECHNICAL DATA

Specifications:
Minimum Operating Pressure: 7 psi (0.5 bar)*
Maximum Working Pressure: 175 psi (12 bar) wwp
Factory tested hydrostatically to 500 psi (34.5 bar)
Thread size: 1/2" NPT, 15 mm BSPT
Nominal K-factor: 5.6 U.S. (80.6 metric**)
Glass-bulb fluid temperature rated to -65 °F (-55 °C)
Overall Length: 2-1/4" (57 mm)

* cULus Listing, FM Approval, and NFPA 13 Installs require a minimum of 7 psi (0.5 bar). The minimum operating pressure for LPCB and CE Approvals ONLY is 5 psi (0.35 bar).

**Metric K-factor measurement shown is in Bar. When pressure is measured in kPa, divide the metric K-factor shown by 10.0.

Material Standards:
Frame Casting: Brass UNS-C84400 or QM Brass
Deflector: Phosphor Bronze UNS-C51000 (Not for FM Approval) or Copper UNS-C19500
Bulb: Glass, nominal 5 mm diameter
Belleville Spring Sealing Assembly: Nickel Alloy, coated on both sides with PTFE Tape
Screw: Brass UNS-C36000
Pip Cap and Insert Assembly: Copper UNS-C11000 and Stainless Steel UNS-S30400
For Polyester Coated Sprinklers: Belleville Spring-Exposed
For ENT coated Sprinklers: Belleville Spring - Exposed, Screw and Pipcap - ENT plated.
Ordering Information: Refer to Table 1

4. INSTALLATION

Refer to appropriate NFPA Installation Standards.

5. OPERATION

During fire conditions, the heat-sensitive liquid in the glass bulb expands, causing the glass to shatter, releasing the pip cap and sealing spring assembly. Water flowing through the sprinkler orifice strikes the sprinkler deflector, forming a uniform spray pattern to extinguish or control the fire.

6. INSPECTIONS, TESTS AND MAINTENANCE

Refer to NFPA 25 for Inspection, Testing and Maintenance requirements.

VIKING® | TECHNICAL DATA | MICROMATIC® STANDARD RESPONSE PENDENT SPRINKLER VK102 (K5.6)

The Viking Corporation, 210 N Industrial Park Drive, Hastings MI 49058
Telephone: 269-945-9501 Technical Services: 877-384-5464 Fax: 269-818-1680 Email: techsvcs@vikingcorp.com
Visit the Viking website for the latest edition of this technical data page www.vikinggroupinc.com

7. AVAILABILITY

The Viking Micromatic® Standard Response Upright Sprinkler VK100 is available through a network of domestic and international distributors. See The Viking Corporation web site for the closest distributor or contact The Viking Corporation.

8. GUARANTEE

For details of warranty, refer to Viking's current list price schedule or contact Viking directly.

TABLE 1: ORDERING INFORMATION
Instructions: Using the sprinkler base part number,
(1) add the suffix for the desired Finish
(2) add the suffix for the desired Temperature Rating.

Sprinkler Base Part No.	Size		1: Finishes		2: Temperature Ratings				
	NPT Inch	BSPT mm	Description	Suffix[1]	Nominal Rating	Bulb Color	Hazard Classification	Max. Ambient Ceiling Temperature[2]	Suffix
12987	1/2	--	Brass	A	135 °F (57 °C)	Orange	Ordinary	100 °F (38 °C)	A
12989	--	15	Chrome	F	155 °F (68 °C)	Red	Ordinary	100 °F (38 °C)	B
20229	--	15	White Polyester [3,5]	M-/W	175 °F (79 °C)	Yellow	Intermediate	150 °F (65 °C)	D
			Black Polyester [3,5]	M-/B	200 °F (93 °C)	Green	Intermediate	150 °F (65 °C)	E
			Wax	C	212 °F (100 °C)	Green	Intermediate	150 °F (65 °C)	M
			Wax over Polyester	V-/W	286 °F (141 °C)	Blue	High	225 °F (107 °C)	G
			ENT [3,4,5]	JN	360 °F (182 °C)	Mauve	Extra High	300 °F (149 °C)	H
					500 °F (260 °C)	Black	Ultra High[6]	465 °F (240 °C)	L

Example: 12987MB/W = VK102 with White Polyester Finish and 155 °F (68 °C) Nominal temperature rating. This sprinkler is to be installed into an area with a maximum ambient temperature of 100 °F (38 °C) meaning if the area will experience temperatures above the maximum ambient rating, you shall use a higher temperature-rated sprinkler.

Corrosion Resistant Coatings[5]

- White Polyester and Black Polyester in all temperature ratings.
- ENT in all temperature ratings except 135 °F (57 °C).
- Wax-Coated Brass and Wax over Polyester[7] for sprinklers with the following temperature ratings:
  155 °F (68 °C) Lt. Brown Wax | 175 °F (79 °C) Brown Wax | 200 °F (93 °C) Brown Wax | 286 °F (141 °C) Dk. Brown Wax[7]

Accessories

Sprinkler Wrenches (see Figure 1):

A. Standard Wrench: Part No. 21475M/B
B. Standard Wrench for Wax Coated Sprinklers: Part No. 10896W/B
C. Socket Wrench for Recessed Pendent Sprinklers: Part No. 13655W/B (A 1/2" ratchet is required, not available from Viking)
D. Socket Wrench for Wax Coated Sprinklers: Part No. 13577W/B (A 1/2" ratchet is required, not available from Viking)
E. Optional Protective Sprinkler Cap Remover/Escutcheon Installer Tool[8]: Part No. 15915

Sprinkler Cabinet:

A. Up to 6 sprinklers: Part number 01724A (available since 1971).
B. 6-12 Sprinklers: Part number 01725A (available since 1971).

Footnotes

1. Where a dash (-) is shown in the Finish suffix designation, insert the desired Temperature Rating suffix. See example above.
2. Based on NFPA 13, NFPA 13R, and NFPA 13D. Other limits may apply, depending on fire loading, sprinkler location, and other requirements of the Authority Having Jurisdiction. Refer to specific installation standards.
3. UL Listed as corrosion resistant.
4. FM Approved corrosion resistant.
5. The corrosion resistant and corrosion proofing coatings have passed the standard corrosion test required by the approving agencies indicated in the Approval Chart(s). These tests cannot and do not represent all possible corrosive environments. Prior to installation, verify through the end-user that the coatings are compatible with or suitable for the proposed environment. For automatic sprinklers, the coatings indicated are applied to the exposed exterior surfaces only. Note that the spring is exposed on sprinklers with Polyester and ENT coatings. For ENT coated automatic sprinklers, the waterway is coated.
6. Sprinklers of Ultra-High temperature rating are intended for use inside ovens, dryers, or similar enclosures with normal operating temperatures above 300 °F (149 °C). Where the ambient temperature around the Ultra-High temperature rated sprinkler is significantly reduced below 300 °F (149 °C), response time may be severely retarded
7. Wax melting point is 170 °F (76 °C) for 286 °F (141 °C) temperature rated sprinklers. For more inforamation regarding wax coatings, refer to Bulletin Form No. F_010201.
8. Allows use from the floor by attaching a length of 1" diameter CPVC tubing to the tool. Ideal for sprinkler cabinets. Refer to Bulletin F_051808.

VIKING®

TECHNICAL DATA

MICROMATIC® STANDARD RESPONSE PENDENT SPRINKLER VK102 (K5.6)

The Viking Corporation, 210 N Industrial Park Drive, Hastings MI 49058
Telephone: 269-945-9501 Technical Services: 877-384-5464 Fax: 269-818-1680 Email: techsvcs@vikingcorp.com
Visit the Viking website for the latest edition of this technical data page www.vikinggroupinc.com

Figure 1: Sprinkler Wrenches

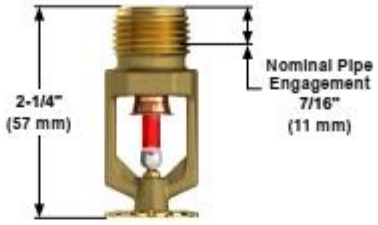

Figure 2: Sprinkler Dimensions

VIKING®

TECHNICAL DATA

MICROMATIC® STANDARD RESPONSE PENDENT SPRINKLER VK102 (K5.6)

The Viking Corporation, 210 N Industrial Park Drive, Hastings MI 49058
Telephone: 269-945-9501 Technical Services: 877-384-5464 Fax: 269-818-1680 Email: techsvcs@vikingcorp.com
Visit the Viking website for the latest edition of this technical data page www.vikinggroupinc.com

Approval Chart 1 (UL)

Micromatic® Standard Response Pendent Sprinkler VK102
Maximum 175 PSI (12 bar) WWP

KEY: Temperature; Finish; A1X ← Escutcheon (if applicable)

Sprinkler Base Part Number[1]	SIN	Thread Size		Nominal K-factor		Overall Length		Listings and Approvals[3] (Refer also to UL Design Criteria.)					
		NPT	BSPT	U.S.	metric[2]	Inches	mm	cULus[4]	VdS	LPCB	CE[8]	MED[9]	China Approval
12987	VK102	1/2"	15 mm	5.6	80.6	2-1/4"	57	A1, B3, B1Y, C4, D2, E5, G5Z	A1	A1, B3, B1Y	F1, G1Y, B4[12]	F2X	--
12989	VK102	--	15 mm	5.6	80.6	2-1/4"	57	A1, B3, B1Y, C4, D2, E5, G5Z	A1	A1, B3, B1Y	F1, G1Y, B4[12]	F2X	--
20229[10]	VK102	--	15 mm	5.6	80.6	2-1/4"	57	E6	--	--	--	--	E6
NOTICE - Product Below - No longer offered.													
10139	VK102	1/2"	15 mm	5.6	80.6	2-1/4"	57	A1, B3, B1Y, C4, D2, E5, G5Z	--	--	--	--	--
10173	VK102	--	15 mm	5.6	80.6	2-1/4"	57	A1, B3, B1Y, C4, D2, E5, G5Z	A1	A1, B3, B1Y	--	F2X	--
18020	VK102	1/2"	15 mm	5.6	80.6	2-1/4"	57	A1, B3, B1Y, C4, D2, E5, G5Z	A1	A1, B3, B1Y	F1, G1X	F2X	--

Approved Temperature Rating Codes

A = 135 °F (57 °C), 155 °F (68 °C), 175 °F (79 °C), 200 °F (93 °C), 286 °F (141 °C), and 360 °F (182 °C)
B = 135 °F (57 °C), 155 °F (68 °C), 175 °F (79 °C), and 200 °F (93 °C)
C = 286 °F (141 °C)
D = 500 °F (260 °C)[7]
E = 155 °F (68 °C), 175 °F (79 °C), 200 °F (93 °C), 286 °F (141 °C), 360 °F (182 °C), and 500 °F (260 °C)[7]
F = 155 °F (68 °C), 175 °F (79 °C), 200 °F (93 °C), 286 °F (141 °C), and 360 °F (182 °C)
G = 155 °F (68 °C), 175 °F (79 °C), and 200 °F (93 °C)

Approved Finish Codes

1 = Brass, Chrome, White Polyester[5,6] and Black Polyester[5,6]
2 = Brass and Chrome
3 = Wax-Coated Brass and Wax Over Polyester[6]
4 = High Temperature 200 °F (93 °C) Wax Coating (corrosion resistant); maximum ambient temperature allowed at ceiling = 150 °F (65 °C)
5 = ENT[5]
6 = Chrome

Approved Escutcheon Codes

X = Recessed with the Viking Model E-1, E-2, or E-3 Recessed Escutcheon
Y = Standard surface-mounted escutcheon or recessed with the Viking Model E-1, E-2, or E-3 Recessed Escutcheon
Z = Standard surface-mounted escutcheon or recessed with the Viking Model E-1 Recessed Escutcheon

Footnotes

1. Base part number is shown. For complete part number, refer to Viking's current price schedule.
2. Metric K-factor shown is for use when pressure is measured in bar. When pressure is measured in kPa, divide the metric K-factor shown by 10.0.
3. This table shows the listings and approvals available at the time of printing. Check with the manufacturer for any additional approvals.
4. Listed by Underwriters Laboratories Inc. for use in the U.S. and Canada.
5. cULus Listed as corrosion resistant.
6. Other colors are available on request with the same Listings and Approvals as the standard colors.
7. Sprinklers of Ultra-High temperature rating are intended for use inside ovens, dryers, or similar enclosures with normal operating temperatures above 300 °F (149 °C). Where the ambient temperature around the Ultra-High temperature rated sprinkler is significantly reduced below 300 °F (149 °C), the response time of the Ultra-High temperature rated sprinkler may be severely retarded.
8. CE: Standard EN 12259-1, EC-certificate of conformity 0832-CPD-0021.
9. MED Certified, Standard EN 12259-1, EC-certificate of conformity 0832-MED-1003 and 0832-MED-1008.
10. Approved according to China GB standard.
11. CE: Standard EC 12259-1, Declaration of Performance DOP_Sprinklers_LPCB_5-2-19 & DOP_VK102WAX_2-12-19

DESIGN CRITERIA - UL

(Also refer to Approval Chart 1.)

cULus Listing Requirements:

The Viking Micromatic0® Standard Response Pendent Sprinkler VK102 is cULus Listed as indicated in Approval Chart 1 for installation in accordance with the latest edition of NFPA 13 for standard spray sprinklers.

- Designed for use in Light, Ordinary, and Extra Hazard occupancies.
- The sprinkler installation rules contained in NFPA 13 for standard spray pendent sprinklers must be followed.

IMPORTANT: Always refer to Bulletin Form No. F_091699 - Care and Handling of Sprinklers. Also refer to Form No. F_080614 for general care, installation, and maintenance information. Viking sprinklers are to be installed in accordance with the latest edition of Viking technical data, the appropriate standards of NFPA, LPCB, APSAD, VdS or other similar organizations, and also with the provisions of governmental codes, ordinances, and standards, whenever applicable.

Form No. F_031414 20.10.20 Rev 20.1

VIKING®

TECHNICAL DATA

MICROMATIC® STANDARD RESPONSE PENDENT SPRINKLER VK102 (K5.6)

The Viking Corporation, 210 N Industrial Park Drive, Hastings MI 49058
Telephone: 269-945-9501 Technical Services: 877-384-5464 Fax: 269-818-1680 Email: techsvcs@vikingcorp.com
Visit the Viking website for the latest edition of this technical data page www.vikinggroupinc.com

Approval Chart 2 (FM)

Micromatic® Standard Response Pendent Sprinkler VK102
Maximum 175 PSI (12 bar) WWP

KEY: Temperature, Finish, A1X Escutcheon (if applicable)

Sprinkler Base Part Number[1]	SIN	Thread Size		Nominal K-Factor		Overall Length		FM Approvals[3] (Refer also to Design Criteria below.)
		NPT	BSPT	U.S.	metric[2]	Inches	mm	
12987	VK102	1/2"	15 mm	5.6	80.6	2-1/4"	57	A1, B2, C3, D1, E4, G1Y, G4Z
12989	VK102	--	15 mm	5.6	80.6	2-1/4"	57	A1, B2, C3, D1, E4, G1Y, G4Z
20229[7]	VK102	--	15 mm	5.6	80.6	2-1/4"	57	E5
NOTICE - Product Below - Limited Availability (Contact Local Viking Office)								
10139	VK102	1/2"	15 mm	5.6	80.6	2-1/4"	57	A1, B2, C3, D1, E4, G1Y, G4Z
10173	VK102	--	15 mm	5.6	80.6	2-1/4"	57	A1, B2, C3, D1, E4, G1Y, G4Z
18020	VK102	1/2"	15 mm	5.6	80.6	2-1/4"	57	A1, B2, C3, D1, G1Y

Approved Temperature Rating Codes

A = 135 °F (57 °C), 155 °F (68 °C), 175 °F (79 °C), 200 °F (93 °C), 212 °F (100 °C), 286 °F (141 °C), and 360 °F (182 °C)
B = 135 °F (57 °C), 155 °F (68 °C), 175 °F (79 °C), 200 °F (93 °C), and 212 °F (100 °C)
C = 286 °F (141 °C)
D = 500 °F (260 °C)[5]
E = 155 °F (68 °C), 175 °F (79 °C), 200 °F (93 °C), 286 °F (141 °C), 360 °F (182 °C), and 500 °F (260 °C)[5]
F = 135 °F (57 °C), 155 °F (68 °C), 175 °F (79 °C), and 200 °F (93 °C)
G = 155 °F (68 °C), 175 °F (79 °C), and 200 °F (93 °C)

Approved Finish Codes

1 = Brass, Chrome, White Polyester[5,6] and Black Polyester[5,6]
2 = Wax-Coated Brass (corrosion resistant)
3 = High Temperature 200 °F (93 °C) Wax Coating (corrosion resistant); maximum ambient temperature allowed at the ceiling = 150 °F (65 °C)
4 = ENT[4]
5 = Chrome

Approved Escutcheon Codes

Y = Standard surface-mounted escutcheon or recessed with the Viking Model E-1, E-2, or E-3 Recessed Escutcheon
Z = Standard surface-mounted escutcheon or recessed with the Viking Model E-1 Recessed Escutcheon

Footnotes

1. Base part number is shown. For complete part number, refer to Viking's current price schedule.
2. Metric K-factor shown is for use when pressure is measured in bar. When pressure is measured in kPa, divide the metric K-factor shown by 10.0.
3. This table shows the listings and approvals available at the time of printing. Check with the manufacturer for any additional approvals.
4. Other colors are available on request with the same Approvals as the standard colors.
5. Sprinklers of Ultra-High temperature rating are intended for use inside ovens, dryers, or similar enclosures with normal operating temperatures above 300 °F (149 °C). Where the ambient temperature around the Ultra-High temperature rated sprinkler is significantly reduced below 300 °F (149 °C), the response time of the Ultra-High temperature rated sprinkler may be severely retarded.
6. FM approved as corrosion resistant.
7. Approved according to China GB standard.

DESIGN CRITERIA - FM

(Also refer to Approval Chart 2.)

FM Approval Requirements:

The Viking Micromatic® Standard Response Pendent Sprinkler VK102 is is FM Approved as standard response **Non-Storage** pendent sprinkler as indicated in the FM Approval Guide. For specific application and installation requirements, reference the latest applicable FM Loss Prevention Data Sheets (including Data Sheet 2-0). FM Global Loss Prevention Data Sheets contain guidelines relating to, but not limited to: minimum water supply requirements, hydraulic design, ceiling slope and obstructions, minimum and maximum allowable spacing, and deflector distance below the ceiling.

NOTE: The FM Installation guidelines may differ from cULus and/or NFPA criteria.

IMPORTANT: Always refer to Bulletin Form No. F_091699 - Care and Handling of Sprinklers. Also refer to Form No. F_080614 for general care, installation, and maintenance information. Viking sprinklers are to be installed in accordance with the latest edition of Viking technical data, the appropriate standards of NFPA, FM Global, LPCB, APSAD, VdS or other similar organizations, and also with the provisions of governmental codes, ordinances, and standards, whenever applicable.

Form No. F_031414 20.10.20 Rev 20.1

VIKING®

TECHNICAL DATA

MICROMATIC® STANDARD RESPONSE PENDENT SPRINKLER VK102 (K5.6)

The Viking Corporation, 210 N Industrial Park Drive, Hastings MI 49058
Telephone: 269-945-9501 Technical Services: 877-384-5464 Fax: 269-818-1680 Email: techsvcs@vikingcorp.com
Visit the Viking website for the latest edition of this technical data page www.vikinggroupinc.com

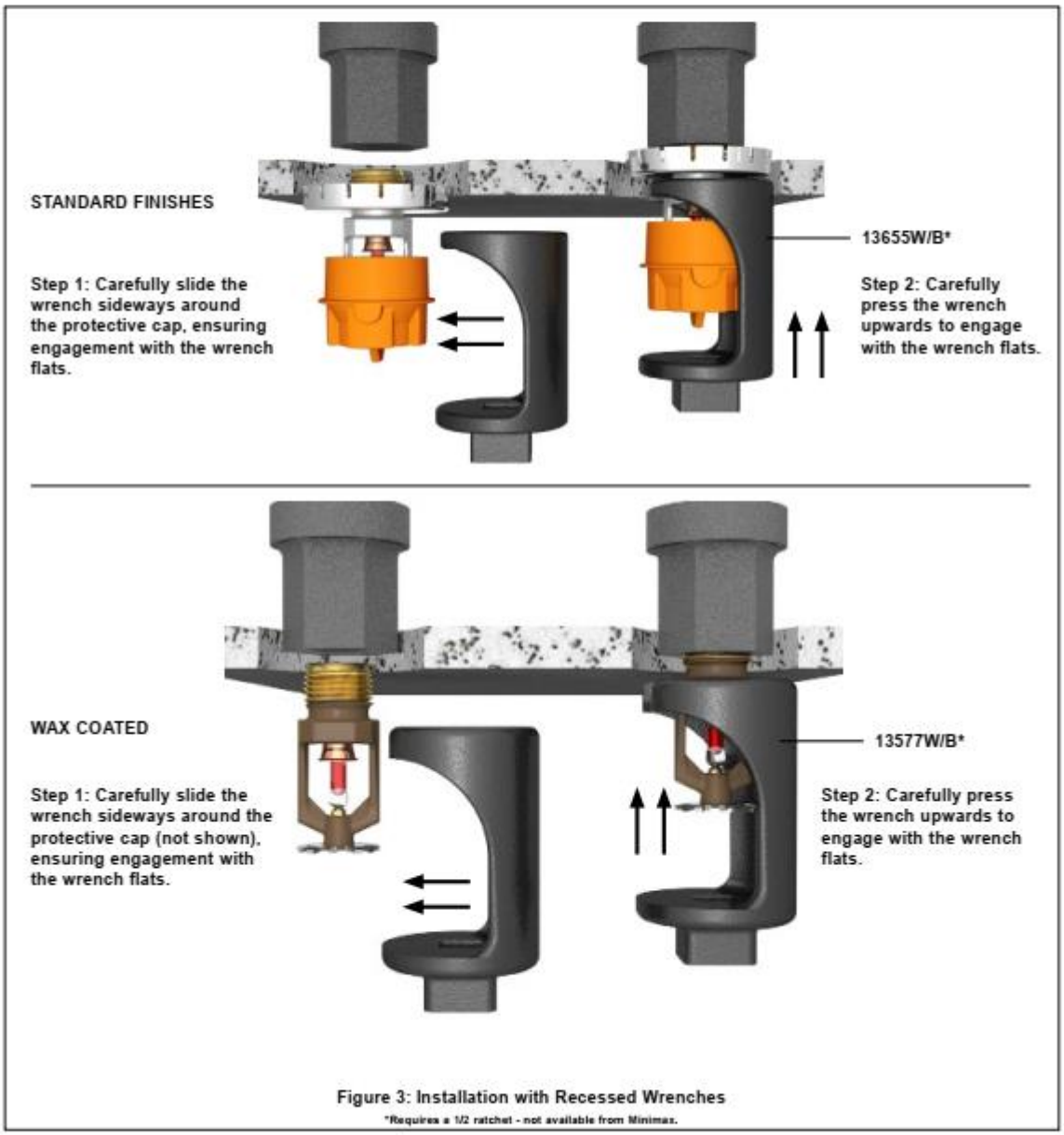

Figure 3: Installation with Recessed Wrenches

*Requires a 1/2 ratchet - not available from Minimax.

Form No. F_031414 20.10.20 Rev 20.1

VIKING®

TECHNICAL DATA

MICROMATIC® STANDARD RESPONSE PENDENT SPRINKLER VK102 (K5.6)

The Viking Corporation, 210 N Industrial Park Drive, Hastings MI 49058
Telephone: 269-945-9501 Technical Services: 877-384-5464 Fax: 269-818-1680 Email: techsvcs@vikingcorp.com
Visit the Viking website for the latest edition of this technical data page www.vikinggroupinc.com

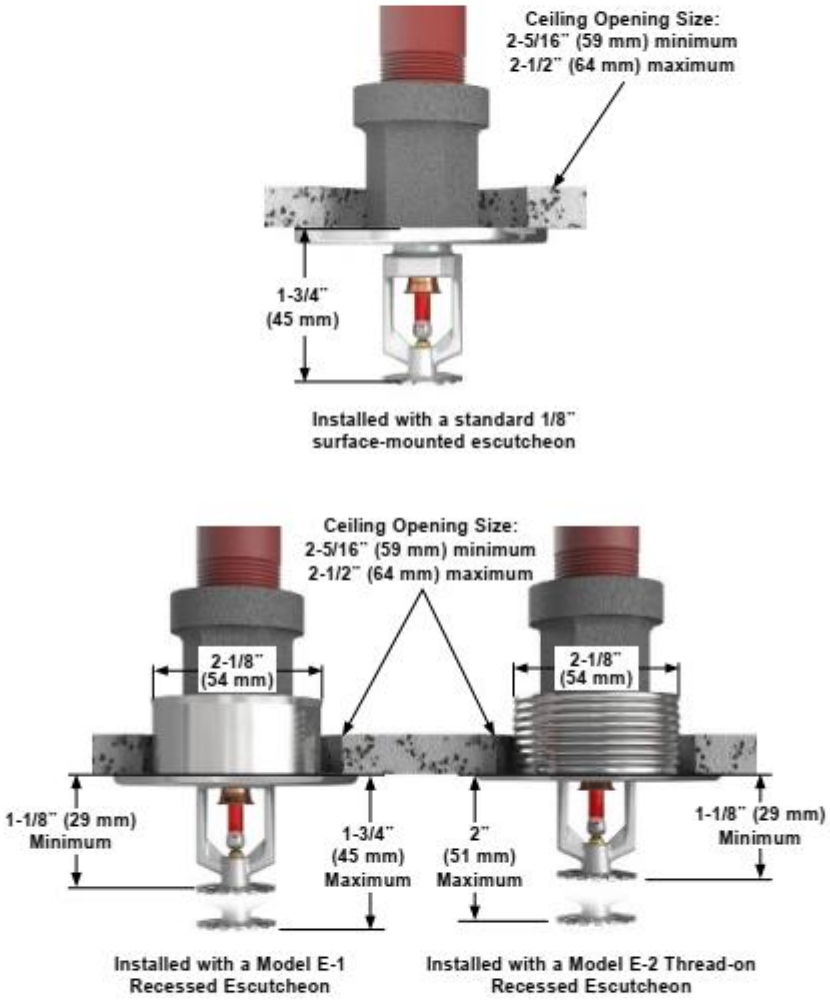

Figure 4: Installation Dimensions with Escutcheons

VIKING®

TECHNICAL DATA

MICROMATIC® STANDARD RESPONSE UPRIGHT SPRINKLER VK200 (K8.0)

The Viking Corporation, 210 N Industrial Park Drive, Hastings MI 49058
Telephone: 269-945-9501 Technical Services: 877-384-5464 Fax: 269-818-1680 Email: techsvcs@vikingcorp.com
Visit the Viking website for the latest edition of this technical data page: www.vikinggroupinc.com

1. DESCRIPTION

The Viking Micromatic® Standard Response Upright VK200 Sprinkler is a small, thermosensitive, glass-bulb spray sprinkler available in several different finishes, temperature ratings, and K-Factors to meet design requirements. The special Polyester and Electroless Nickel PTFE (ENT) coatings can be used in decorative applications where colors are desired. In addition, these coatings have been investigated for installation in corrosive environments and are listed/approved as as indicated in the Approval Charts.

Viking standard response sprinklers may be ordered and/or used as open sprinklers (glass bulb and pip cap assembly removed) on deluge systems. Refer to Ordering Instructions.

WARNING: Cancer and Reproductive Harm- www.P65Warnings.ca.gov

2. LISTINGS AND APPROVALS

cULus Listed: Category VNIV

FM Approved: Class Series 2000

VdS Approved: Certificates G414013, G414014, G498006, and G4060055

LPCB Approved: Certificate 096e/06

CE Certified: Standard EN 12259-1, EC-certificate of conformity 0832-CPD-2001, EC-certificate of constancy of performance 0832-CPR-S0021

China Approval: Approved according to China GB Standard

MED Certified: Standard EN 12259-1, EC-certificate of conformity 0832-MED-1003

NOTE: Other International approval certificates are available upon request.
Refer to Approval Charts and Design Criteria for listing and approval requirements that must be followed.

3. TECHNICAL DATA

Specifications:

Minimum Operating Pressure: 7 psi (0.5 bar)†
Maximum Working Pressure: 175 psi (12 bar) wwp
Factory tested hydrostatic rating: 500 psi (34.5 bar)
Thread size: 1/2" NPT, 15 mm BSP, 3/4" NPT, 20 mm BSPT
Nominal K-Factor: 8.0 U.S. (115.2 metric**)
Glass-bulb fluid temperature rating: -65 °F (-55 °C)
Overall Length: 2-3/8" (60 mm)

† cULus Listing, FM Approval, and NFPA 13 Installs require a minimum of 7 psi (0.5 bar). The minimum operating pressure for LPCB and CE Approvals ONLY is 5 psi (0.35 bar).

** Metric K-factor measurement shown is in Bar. When pressure is measured in kPa, divide the metric K-factor shown by 10.0.

Material Standards:

Frame Casting: Brass UNS-C84400
Deflector: Copper UNS-C19500
Bulb: Glass, nominal 5 mm diameter
Belleville Spring Sealing Assembly: Nickel Alloy, coated on both sides with PTFE Tape
Screw: Brass UNS-C36000
Pip Cap and Insert Assembly: Copper UNS-C11000 and Stainless Steel UNS-S30400
For Polyester Coated Sprinklers: Belleville Spring-Exposed
For ENT coated Sprinklers: Belleville Spring - Exposed, Screw and Pipcap - ENT plated.

††Not for FM Approval.

Ordering Information: Refer to Table 1.

4. INSTALLATION

Refer to appropriate NFPA Installation Standards.

5. OPERATION

During fire conditions, the heat-sensitive liquid in the glass bulb expands, causing the glass to shatter, releasing the pip cap and sealing spring assembly. Water flowing through the sprinkler orifice strikes the sprinkler deflector, forming a uniform spray pattern to extinguish or control the fire.

Form No. F_032814 19.10.14 Rev 19.2

Replaces Form No. F_032814 Rev 19.1
(Revised China Approval; removed 20381)

VIKING®

TECHNICAL DATA

MICROMATIC® STANDARD RESPONSE UPRIGHT SPRINKLER VK200 (K8.0)

The Viking Corporation, 210 N Industrial Park Drive, Hastings MI 49058
Telephone: 269-945-9501 Technical Services: 877-384-5464 Fax: 269-818-1680 Email: techsvcs@vikingcorp.com
Visit the Viking website for the latest edition of this technical data page: www.vikinggroupinc.com

6. INSPECTIONS, TESTS AND MAINTENANCE

Refer to NFPA 25 for Inspection, Testing and Maintenance requirements.

7. AVAILABILITY

The Viking Micromatic® Standard Response Upright Sprinkler VK200 is available through a network of domestic and international distributors. See The Viking Corporation web site for the closest distributor or contact The Viking Corporation.

8. GUARANTEE

For details of warranty, refer to Viking's current list price schedule or contact Viking directly.

TABLE 1: ORDERING INFORMATION
Instructions: Using the sprinkler base part number,
(1) add the suffix for the desired Finish
(2) add the suffix for the desired Temperature Rating.

Sprinkler Base Part No.	Size		1: Finishes		2: Temperature Ratings				
	NPT Inch	BSPT mm	Description	Suffix[1]	Nominal Rating	Bulb Color	Hazard Classification	Max. Ambient Ceiling Temperature[2]	Suffix
18263	3/4	--	Brass	A	135 °F (57 °C)	Orange	Ordinary	100 °F (38 °C)	A
18266	--	20	Chrome	F	155 °F (68 °C)	Red	Ordinary	100 °F (38 °C)	B
18268[8]	1/2	--	White Polyester	M-/W	175 °F (79 °C)	Yellow	Intermediate	150 °F (65 °C)	D
20377[9]	--	20	Black Polyester	M-/B	200 °F (93 °C)	Green	Intermediate	150 °F (65 °C)	E
			Wax	C	286 °F (141 °C)	Blue	High	225 °F (107 °C)	G
			Wax over Polyester	V-/W	360 °F (182 °C)	Mauve	Extra High	300 °F (149 °C)	H
			ENT [3]	JN	500 °F (260 °C)	Black	Ultra High[6]	465 °F (240 °C)	L

Example: 13001MB/W = VK200 with White Polyester Finish and 155 °F (68 °C) Nominal temperature rating. This sprinkler is to be installed into an area with a maximum ambient temperature of 100 °F (38 °C) meaning if the area will experience temperatures above the maximum ambient rating, you shall use a higher temperature-rated sprinkler.

Corrosion Resistant Coatings[5]

- White Polyester and Black Polyester in all temperature ratings.
- ENT in all temperature ratings except 135 °F (57 °C).
- Wax-Coated Brass and Wax over Polyester[7] for sprinklers with the following temperature ratings:
  155 °F (68 °C) Lt. Brown Wax | 175 °F (79 °C) Brown Wax | 200 °F (93 °C) Brown Wax | 286 °F (141 °C) Dk. Brown Wax[7]

Accessories

Sprinkler Wrenches (see Figure 1):

A. Standard Wrench: Part No. 21475M/B
B. Standard Wrench for Wax Coated Sprinklers: Part No. 10896W/B
C. Socket Wrench for Recessed Pendent Sprinklers: Part No. 13655W/B (A 1/2" ratchet is required, not available from Viking)
D. Socket Wrench for Wax Coated Sprinklers: Part No. 13577W/B (A 1/2" ratchet is required, not available from Viking)
E. Optional Protective Sprinkler Cap Remover/Escutcheon Installer Tool[9]: Part No. 15915

Sprinkler Cabinet:

A. Up to 6 sprinklers: Part number 01724A (available since 1971).
B. 6-12 Sprinklers: Part number 01725A (available since 1971).

Footnotes

1. Where a dash (-) is shown in the Finish suffix designation, insert the desired Temperature Rating suffix. See example above.
2. Based on NFPA 13, NFPA 13R, and NFPA 13D. Other limits may apply, depending on fire loading, sprinkler location, and other requirements of the Authority Having Jurisdiction. Refer to specific installation standards.
3. FM Approved corrosion resistant.
4. The corrosion resistant and corrosion proofing coatings have passed the standard corrosion test required by the approving agencies indicated in the Approval Chart(s). These tests cannot and do not represent all possible corrosive environments. Prior to installation, verify through the end-user that the coatings are compatible with or suitable for the proposed environment. For automatic sprinklers, the coatings indicated are applied to the exposed exterior surfaces only. Note that the spring is exposed on sprinklers with Polyester and ENT coatings. For ENT coated automatic sprinklers, the waterway is coated.
5. Sprinklers of Ultra-High temperature rating are intended for use inside ovens, dryers, or similar enclosures with normal operating temperatures above 300 °F (149 °C). Where the ambient temperature around the Ultra-High temperature rated sprinkler is significantly reduced below 300 °F (149 °C), response time may be severely retarded
6. Wax melting point is 170 °F (76 °C) for 286 °F (141 °C) temperature rated sprinklers. For more inforamation regarding wax coatings, refer to Bulletin Form No. F_010201.
7. Allows use from the floor by attaching a length of 1" diameter CPVC tubing to the tool. Ideal for sprinkler cabinets. Refer to Bulletin F_051808.
8. The 1/2" NPT Large Orifice Sprinkler is listed and approved for retrofit only when installed in accordance with NFPA 13.
9. Approved according to China GB Standard.

Form No. F_032814 19.10.14 Rev 19.2

VIKING®	TECHNICAL DATA	MICROMATIC® STANDARD RESPONSE UPRIGHT SPRINKLER VK200 (K8.0)

The Viking Corporation, 210 N Industrial Park Drive, Hastings MI 49058
Telephone: 269-945-9501 Technical Services: 877-384-5464 Fax: 269-818-1680 Email: techsvcs@vikingcorp.com
Visit the Viking website for the latest edition of this technical data page: www.vikinggroupinc.com

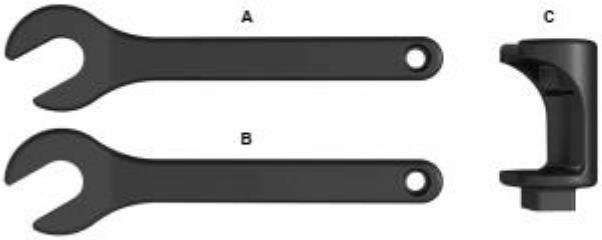

Figure 1: Sprinkler Wrenches

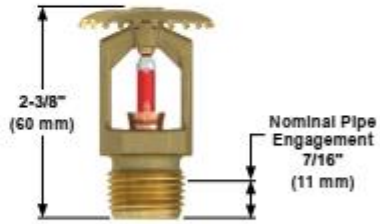

Figure 2: Sprinkler Dimensions

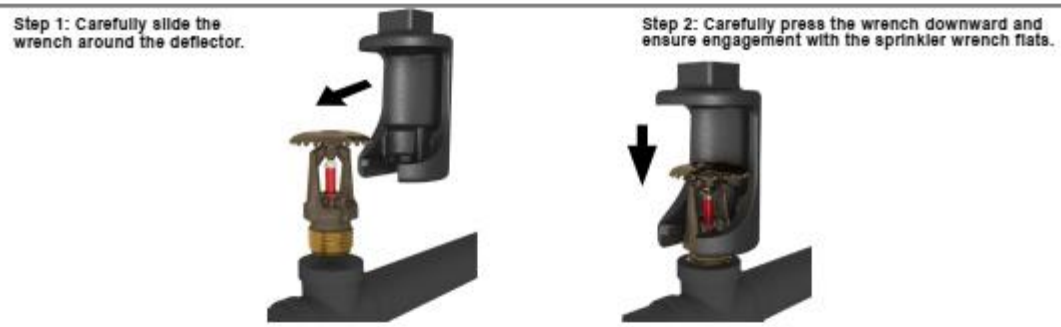

Figure 3: Wax Coated Sprinkler Installation

VIKING®

TECHNICAL DATA

MICROMATIC® STANDARD RESPONSE UPRIGHT SPRINKLER VK200 (K8.0)

The Viking Corporation, 210 N Industrial Park Drive, Hastings MI 49058
Telephone: 269-945-9501 Technical Services: 877-384-5464 Fax: 269-818-1680 Email: techsvcs@vikingcorp.com
Visit the Viking website for the latest edition of this technical data page: www.vikinggroupinc.com

Approval Chart 1 (UL)

Micromatic® Standard Response Upright Sprinklers
Maximum 175 PSI (12 bar) WWP

Sprinkler Base Part Number[1]	SIN	Thread Size		Nominal K-Factor		Overall Length		Listings and Approvals[3] (Refer also to UL Design Criteria.)					
		NPT	BSPT	U.S.	metric[2]	Inches	mm	cULus[4]	VdS	LPCB	CE[8]	[10]	China Approval
Standard Orifice													
18263	VK200	3/4"	20 mm	8.0	115.2	2-1/4"	57	A1, B4, C5, D3, E6	A2	A2, B4	F3	F3	--
18266	VK200	--	20 mm	8.0	115.2	2-1/4"	57	A1, B4, C5, D3, E6	A2	A2, B4	F3	F3	--
18268[9]	VK200	1/2"	15 mm	8.0	115.2	2-1/4"	57	A1, B4, C5, D3, E6	A2	A2, B4	F3	F3	--
20377[11]	VK200	--	20 mm	8.0	115.2	2-1/4"	57	G3	--	--	--	--	G3
NOTICE - Product Below - Limited Availability (Contact Local Viking Office)													
10220[9]	VK200	1/2"	15 mm	8.0	115.2	2-1/4"	57	A1, B4, C5, D3, E6	A2	A2, B4	F3	F3	--
10141	VK200	3/4"	20 mm	8.0	115.2	2-1/4"	57	A1, B4, C5, D3, E6	A2	A2, B4	F3	F3	--
10169	VK200	--	20 mm	8.0	115.2	2-1/4"	57	A1, B4, C5, D3, E6	A2	A2, B4	F3	F3	--

Approved Temperature Ratings

A - 135 °F (57 °C), 155 °F (68 °C), 175 °F (79 °C), 200 °F (93 °C), 286 °F (141 °C), and 360 °F (182 °C)

B - 135 °F (57 °C), 155 °F (68 °C), 175 °F (79 °C), and 200 °F (93 °C)

C - 286 °F (141 °C)

D - 500 °F (260 °C)[7]

E - 155 °F (68 °C), 175 °F (79 °C), 200 °F (93 °C), 286 °F (141 °C), 360 °F (182 °C), and 500 °F (260 °C)[7]

F - 155 °F (68 °C), 175 °F (79 °C), 200 °F (93 °C), 286 °F (141 °C), and 360 °F (182 °C)

G - 155 °F (68 °C), 200 °F (93 °C), and 286 °F (141 °C)

Approved Finishes

1 - Brass, Chrome, White Polyester[5,6] and Black Polyester[5,6]

2 - Brass, Chrome, White Polyester[6], and Black Polyester[6]

3 - Brass and Chrome

4 - Wax-Coated Brass and Wax Over Polyester[5]

5 - High Temperature 200 °F (93 °C) Wax Coating (corrosion resistant); maximum ambient temperature allowed at ceiling = 150 °F (65 °C)

6 - ENT[5]

Footnotes

1. Base part number is shown. For complete part number, refer to Viking's current price schedule.
2. Metric K-factor shown is for use when pressure is measured in bar. When pressure is measured in kPa, divide the metric K-factor shown by 10.0.
3. This table shows the listings and approvals available at the time of printing. Check with the manufacturer for any additional approvals.
4. Listed by Underwriters Laboratories Inc. for use in the U.S. and Canada.
5. cULus Listed as corrosion resistant.
6. Other colors are available on request with the same Listings and Approvals as the standard colors.
7. Sprinklers of Ultra-High temperature rating are intended for use inside ovens, dryers, or similar enclosures with normal operating temperatures above 300 °F (149 °C). Where the ambient temperature around the Ultra-High temperature rated sprinkler is significantly reduced below 300 °F (149 °C), the response time of the Ultra-High temperature rated sprinkler may be severely retarded.
8. CE Certified, Standard EN 12259-1, EC-certificate of conformity 0832-CPD-2001, and EC-certificate of constancy of performance 0832-CPR-S0021.
9. The 1/2" NPT Large Orifice Sprinkler is listed and approved for retrofit only when installed in accordance with NFPA 13.
10. MED Certified, Standard EN 12259-1, EC-certificate 0832-MED-1003.
11. Approved according to China GB Standard.

DESIGN CRITERIA - UL

(Also refer to Approval Chart 1.)

cULus Listing Requirements:

The Viking Micromatic® Standard Response Upright Sprinkler VK200 is cULus Listed as indicated in Approval Chart 1 for installation in accordance with the latest edition of NFPA 13 for standard spray sprinklers.

- Designed for use in Light, Ordinary, and Extra Hazard occupancies.
- The sprinkler installation rules contained in NFPA 13 for standard spray upright sprinklers must be followed.

IMPORTANT: Always refer to Bulletin Form No. F_091699 - Care and Handling of Sprinklers. Also refer to page F_080614 for general care, installation, and maintenance information. Viking sprinklers are to be installed in accordance with the latest edition of Viking technical data, the appropriate standards of NFPA, LPCB, APSAD, VdS or other similar organizations, and also with the provisions of governmental codes, ordinances, and standards, whenever applicable.

Form No. F_032814 19.10.14 Rev 19.2

VIKING®

TECHNICAL DATA

MICROMATIC® STANDARD RESPONSE UPRIGHT SPRINKLER VK200 (K8.0)

The Viking Corporation, 210 N Industrial Park Drive, Hastings MI 49058
Telephone: 269-945-9501 Technical Services: 877-384-5464 Fax: 269-818-1680 Email: techsvcs@vikingcorp.com
Visit the Viking website for the latest edition of this technical data page: www.vikinggroupinc.com

Approval Chart 2 (FM)

Micromatic® Standard Response Upright Sprinklers
Maximum 175 PSI (12 bar) WWP

KEY: Temperature, Finish, A1X Escutcheon (if applicable)

Sprinkler Base Part Number[1]	SIN	Thread Size		Nominal K-Factor		Overall Length		FM Approvals[3] (Refer also to Design Criteria below.)
		NPT	BSPT	U.S.	metric[2]	Inches	mm	
Standard Orifice								
18268[7]	VK200	1/2"	15 mm	8.0	115.2	2-1/4"	57	A1, B2, C1, D3
18263	VK200	3/4"	20 mm	8.0	115.2	2-1/4"	57	A1, B2, C1, D3
18266	VK200	--	20 mm	8.0	115.2	2-1/4"	57	A1, B2, C1, D3
20377[8]	VK200	--	20 mm	8.0	115.2	2-1/4"	57	E4
NOTICE - Product Below - Limited Availability (Contact Local Viking Office)								
10220[7]	VK200	1/2"	15 mm	8.0	115.2	2-1/4"	57	A1, B2, C1, D3
10141	VK200	3/4"	20 mm	8.0	115.2	2-1/4"	57	A1, B2, C1, D3
10169	VK200	--	20 mm	8.0	115.2	2-1/4"	57	A1, B2, C1, D3

Approved Temperature Ratings

A-135°F(57°C), 155°F(68°C), 175°F(79°C), 200°F(93°C), 286 °F (141 °C), and 360 °F (182 °C)

B - 135 °F (57 °C), 155 °F (68 °C), 175 °F (79 °C), and 200 °F (93 °C)

C - 500 °F (260 °C)[5]

D - 155 °F (68 °C), 175 °F (79 °C), 200 °F (93 °C), 286 °F (141 °C), 360 °F (182 °C), and 500 °F (260 °C)[5]

E - 155 °F (68 °C), 200 °F (93 °C), 286 °F (141 °C)

Approved Finishes

1 - Brass, Chrome, White Polyester[4], and Black Polyester[4]

2 - Wax-Coated Brass (corrosion resistant)

3 - ENT[6]

4 - Brass and Chrome

Footnotes

[1] Base part number is shown. For complete part number, refer to Viking's current price schedule.

[2] Metric K-factor shown is for use when pressure is measured in bar. When pressure is measured in kPa, divide the metric K-factor shown by 10.0.

[3] This table shows the listings and approvals available at the time of printing. Check with the manufacturer for any additional approvals.

[4] Other colors are available on request with the same Approvals as the standard colors.

[5] Sprinklers of Ultra-High temperature rating are intended for use inside ovens, dryers, or similar enclosures with normal operating temperatures above 300 °F (149 °C). Where the ambient temperature around the Ultra-High temperature rated sprinkler is significantly reduced below 300 °F (149 °C), the response time of the Ultra-High temperature rated sprinkler may be severely retarded.

[6] FM approved as corrosion resistant.

[7] The 1/2" NPT Large Orifice Sprinkler is listed and approved for retrofit only when installed in accordance with NFPA 13.

[8] Approved according to China GB Standard.

DESIGN CRITERIA - FM

(Also refer to Approval Chart 2.)

FM Approval Requirements:

The Viking Micromatic® Standard Response Upright Sprinkler VK200 is is FM Approved as standard response **Non-Storage** upright sprinkler as indicated in the FM Approval Guide. For specific application and installation requirements, reference the latest applicable FM Loss Prevention Data Sheets (including Data Sheet 2-0). FM Global Loss Prevention Data Sheets contain guidelines relating to, but not limited to: minimum water supply requirements, hydraulic design, ceiling slope and obstructions, minimum and maximum allowable spacing, and deflector distance below the ceiling.

NOTE: The FM Installation guidelines may differ from cULus and/or NFPA criteria.

IMPORTANT: Always refer to Bulletin Form No. F_091699 - Care and Handling of Sprinklers. Also refer to page F_080614 for general care, installation, and maintenance information. Viking sprinklers are to be installed in accordance with the latest edition of Viking technical data, the appropriate standards of NFPA, FM Global, LPCB, APSAD, VdS or other similar organizations, and also with the provisions of governmental codes, ordinances, and standards, whenever applicable.

Form No. F_032814 19.10.14 Rev 19.2

Replaces Form No. F_032814 Rev 19.1
(Revised China Approval; removed 20381)

VIKING®

TECHNICAL DATA

MICROMATIC® STANDARD RESPONSE PENDENT SPRINKLER VK102 (K5.6)

The Viking Corporation, 210 N Industrial Park Drive, Hastings MI 49058
Telephone: 269-945-9501 Technical Services: 877-384-5464 Fax: 269-818-1680 Email: techsvcs@vikingcorp.com
Visit the Viking website for the latest edition of this technical data page www.vikinggroupinc.com

1. DESCRIPTION

The Viking Micromatic® Standard Response Pendent VK102 Sprinkler is a small, thermosensitive, glass-bulb spray sprinkler available in several different finishes and temperature ratings to meet design requirements. The special Polyester, and Electroless Nickel PTFE (ENT) coatings can be used in decorative applications where colors are desired. In addition, these coatings have been investigated for installation in corrosive environments and are listed/approved as indicated in the Approval Charts.

Viking standard response sprinklers may be ordered and/or used as open sprinklers (glass bulb and pip cap assembly removed) on deluge systems. Refer to Ordering Instructions.

2. LISTINGS AND APPROVALS

cULus Listed: Category VNIV

FM Approved: Classes 2001, 2002, 2015, 2017, 2043

VdS Approved: Certificate G414006 & G414004

LPCB Approved

CE: Standard EN 12259-1, DOP_Sprinklers_LPCB_5-2-19 & DOP_VK102WAX_2-12-19

MED Certified: Standard EN 12259-1, EC-certificate 0832-MED-1003

China Approval: Approved according to China GB standard.

NOTE: Other International approval certificates are available upon request.
Refer to Approval Charts and Design Criteria for listing and approval requirements that must be followed.

3. TECHNICAL DATA

Specifications:
Minimum Operating Pressure: 7 psi (0.5 bar)*
Maximum Working Pressure: 175 psi (12 bar) wwp
Factory tested hydrostatically to 500 psi (34.5 bar)
Thread size: 1/2" NPT, 15 mm BSPT
Nominal K-factor: 5.6 U.S. (80.6 metric**)
Glass-bulb fluid temperature rated to -65 °F (-55 °C)
Overall Length: 2-1/4" (57 mm)

* cULus Listing, FM Approval, and NFPA 13 Installs require a minimum of 7 psi (0.5 bar). The minimum operating pressure for LPCB and CE Approvals ONLY is 5 psi (0.35 bar).

**Metric K-factor measurement shown is in Bar. When pressure is measured in kPa, divide the metric K-factor shown by 10.0.

Material Standards:
Frame Casting: Brass UNS-C84400 or QM Brass
Deflector: Phosphor Bronze UNS-C51000 (Not for FM Approval) or Copper UNS-C19500
Bulb: Glass, nominal 5 mm diameter
Belleville Spring Sealing Assembly: Nickel Alloy, coated on both sides with PTFE Tape
Screw: Brass UNS-C36000
Pip Cap and Insert Assembly: Copper UNS-C11000 and Stainless Steel UNS-S30400
For Polyester Coated Sprinklers: Belleville Spring-Exposed
For ENT coated Sprinklers: Belleville Spring - Exposed, Screw and Pipcap - ENT plated.
Ordering Information: Refer to Table 1

4. INSTALLATION

Refer to appropriate NFPA Installation Standards.

5. OPERATION

During fire conditions, the heat-sensitive liquid in the glass bulb expands, causing the glass to shatter, releasing the pip cap and sealing spring assembly. Water flowing through the sprinkler orifice strikes the sprinkler deflector, forming a uniform spray pattern to extinguish or control the fire.

6. INSPECTIONS, TESTS AND MAINTENANCE

Refer to NFPA 25 for Inspection, Testing and Maintenance requirements.

Form No. F_031414 20.10.20 Rev 20.1

Replaces Form No. F_031414 Rev 19.2
(Revised CE approval)

VIKING® | TECHNICAL DATA | MICROMATIC® STANDARD RESPONSE PENDENT SPRINKLER VK102 (K5.6)

The Viking Corporation, 210 N Industrial Park Drive, Hastings MI 49058
Telephone: 269-945-9501 Technical Services: 877-384-5464 Fax: 269-818-1680 Email: techsvcs@vikingcorp.com
Visit the Viking website for the latest edition of this technical data page www.vikinggroupinc.com

7. AVAILABILITY

The Viking Micromatic® Standard Response Upright Sprinkler VK100 is available through a network of domestic and international distributors. See The Viking Corporation web site for the closest distributor or contact The Viking Corporation.

8. GUARANTEE

For details of warranty, refer to Viking's current list price schedule or contact Viking directly.

TABLE 1: ORDERING INFORMATION
Instructions: Using the sprinkler base part number,
(1) add the suffix for the desired Finish
(2) add the suffix for the desired Temperature Rating.

Sprinkler Base Part No.	Size		1: Finishes		2: Temperature Ratings				
	NPT Inch	BSPT mm	Description	Suffix[1]	Nominal Rating	Bulb Color	Hazard Classification	Max. Ambient Ceiling Temperature[2]	Suffix
12987	1/2	--	Brass	A	135 °F (57 °C)	Orange	Ordinary	100 °F (38 °C)	A
12989	--	15	Chrome	F	155 °F (68 °C)	Red	Ordinary	100 °F (38 °C)	B
20229	--	15	White Polyester [3,5]	M-/W	175 °F (79 °C)	Yellow	Intermediate	150 °F (65 °C)	D
			Black Polyester [3,5]	M-/B	200 °F (93 °C)	Green	Intermediate	150 °F (65 °C)	E
			Wax	C	212 °F (100 °C)	Green	Intermediate	150 °F (65 °C)	M
			Wax over Polyester	V-/W	286 °F (141 °C)	Blue	High	225 °F (107 °C)	G
			ENT [3,4,5]	JN	360 °F (182 °C)	Mauve	Extra High	300 °F (149 °C)	H
					500 °F (260 °C)	Black	Ultra High[6]	465 °F (240 °C)	L

Example: 12987MB/W = VK102 with White Polyester Finish and 155 °F (68 °C) Nominal temperature rating. This sprinkler is to be installed into an area with a maximum ambient temperature of 100 °F (38 °C) meaning if the area will experience temperatures above the maximum ambient rating, you shall use a higher temperature-rated sprinkler.

Corrosion Resistant Coatings[5]

- White Polyester and Black Polyester in all temperature ratings.
- ENT in all temperature ratings except 135 °F (57 °C).
- Wax-Coated Brass and Wax over Polyester[7] for sprinklers with the following temperature ratings:
  155 °F (68 °C) Lt. Brown Wax | 175 °F (79 °C) Brown Wax | 200 °F (93 °C) Brown Wax | 286 °F (141 °C) Dk. Brown Wax[7]

Accessories

Sprinkler Wrenches (see Figure 1):

A. Standard Wrench: Part No. 21475M/B
B. Standard Wrench for Wax Coated Sprinklers: Part No. 10896W/B
C. Socket Wrench for Recessed Pendent Sprinklers: Part No. 13655W/B (A 1/2" ratchet is required, not available from Viking)
D. Socket Wrench for Wax Coated Sprinklers: Part No. 13577W/B (A 1/2" ratchet is required, not available from Viking)
E. Optional Protective Sprinkler Cap Remover/Escutcheon Installer Tool[8]: Part No. 15915

Sprinkler Cabinet:

A. Up to 6 sprinklers: Part number 01724A (available since 1971).
B. 6-12 Sprinklers: Part number 01725A (available since 1971).

Footnotes

1. Where a dash (-) is shown in the Finish suffix designation, insert the desired Temperature Rating suffix. See example above.
2. Based on NFPA 13, NFPA 13R, and NFPA 13D. Other limits may apply, depending on fire loading, sprinkler location, and other requirements of the Authority Having Jurisdiction. Refer to specific installation standards.
3. UL Listed as corrosion resistant.
4. FM Approved corrosion resistant.
5. The corrosion resistant and corrosion proofing coatings have passed the standard corrosion test required by the approving agencies indicated in the Approval Chart(s). These tests cannot and do not represent all possible corrosive environments. Prior to installation, verify through the end-user that the coatings are compatible with or suitable for the proposed environment. For automatic sprinklers, the coatings indicated are applied to the exposed exterior surfaces only. Note that the spring is exposed on sprinklers with Polyester and ENT coatings. For ENT coated automatic sprinklers, the waterway is coated.
6. Sprinklers of Ultra-High temperature rating are intended for use inside ovens, dryers, or similar enclosures with normal operating temperatures above 300 °F (149 °C). Where the ambient temperature around the Ultra-High temperature rated sprinkler is significantly reduced below 300 °F (149 °C), response time may be severely retarded
7. Wax melting point is 170 °F (76 °C) for 286 °F (141 °C) temperature rated sprinklers. For more inforamation regarding wax coatings, refer to Bulletin Form No. F_010201.
8. Allows use from the floor by attaching a length of 1" diameter CPVC tubing to the tool. Ideal for sprinkler cabinets. Refer to Bulletin F_051808.

VIKING®

TECHNICAL DATA

MICROMATIC® STANDARD RESPONSE PENDENT SPRINKLER VK102 (K5.6)

The Viking Corporation, 210 N Industrial Park Drive, Hastings MI 49058
Telephone: 269-945-9501 Technical Services: 877-384-5464 Fax: 269-818-1680 Email: techsvcs@vikingcorp.com
Visit the Viking website for the latest edition of this technical data page www.vikinggroupinc.com

Figure 1: Sprinkler Wrenches

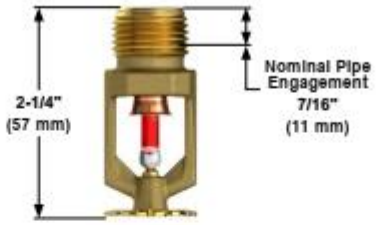

Figure 2: Sprinkler Dimensions

Form No. F_031414 20.10.20 Rev 20.1

VIKING®

TECHNICAL DATA

MICROMATIC® STANDARD RESPONSE PENDENT SPRINKLER VK102 (K5.6)

The Viking Corporation, 210 N Industrial Park Drive, Hastings MI 49058
Telephone: 269-945-9501 Technical Services: 877-384-5464 Fax: 269-818-1680 Email: techsvcs@vikingcorp.com
Visit the Viking website for the latest edition of this technical data page www.vikinggroupinc.com

Approval Chart 1 (UL)

Micromatic® Standard Response Pendent Sprinkler VK102
Maximum 175 PSI (12 bar) WWP

KEY: Temperature; Finish; A1X ← Escutcheon (if applicable)

Sprinkler Base Part Number[1]	SIN	Thread Size		Nominal K-factor		Overall Length		Listings and Approvals[3] (Refer also to UL Design Criteria.)					
		NPT	BSPT	U.S.	metric[2]	Inches	mm	cULus[4]	VdS	LPCB	CE[8]	MED[9]	China Approval
12987	VK102	1/2"	15 mm	5.6	80.6	2-1/4"	57	A1, B3, B1Y, C4, D2, E5, G5Z	A1	A1, B3, B1Y	F1, G1Y, B4[12]	F2X	--
12989	VK102	--	15 mm	5.6	80.6	2-1/4"	57	A1, B3, B1Y, C4, D2, E5, G5Z	A1	A1, B3, B1Y	F1, G1Y, B4[12]	F2X	--
20229[10]	VK102	--	15 mm	5.6	80.6	2-1/4"	57	E6	--	--	--	--	E6
NOTICE - Product Below - No longer offered.													
10139	VK102	1/2"	15 mm	5.6	80.6	2-1/4"	57	A1, B3, B1Y, C4, D2, E5, G5Z	--	--	--	--	--
10173	VK102	--	15 mm	5.6	80.6	2-1/4"	57	A1, B3, B1Y, C4, D2, E5, G5Z	A1	A1, B3, B1Y	--	F2X	--
18020	VK102	1/2"	15 mm	5.6	80.6	2-1/4"	57	A1, B3, B1Y, C4, D2, E5, G5Z	A1	A1, B3, B1Y	F1, G1X	F2X	--

Approved Temperature Rating Codes

A = 135 °F (57 °C), 155 °F (68 °C), 175 °F (79 °C), 200 °F (93 °C), 286 °F (141 °C), and 360 °F (182 °C)
B = 135 °F (57 °C), 155 °F (68 °C), 175 °F (79 °C), and 200 °F (93 °C)
C = 286 °F (141 °C)
D = 500 °F (260 °C)[7]
E = 155 °F (68 °C), 175 °F (79 °C), 200 °F (93 °C), 286 °F (141 °C), 360 °F (182 °C), and 500 °F (260 °C)[7]
F = 155 °F (68 °C), 175 °F (79 °C), 200 °F (93 °C), 286 °F (141 °C), and 360 °F (182 °C)
G = 155 °F (68 °C), 175 °F (79 °C), and 200 °F (93 °C)

Approved Finish Codes

1 = Brass, Chrome, White Polyester[5,6] and Black Polyester[5,6]
2 = Brass and Chrome
3 = Wax-Coated Brass and Wax Over Polyester[5]
4 = High Temperature 200 °F (93 °C) Wax Coating (corrosion resistant); maximum ambient temperature allowed at ceiling = 150 °F (65 °C)
5 = ENT[5]
6 = Chrome

Approved Escutcheon Codes

X = Recessed with the Viking Model E-1, E-2, or E-3 Recessed Escutcheon
Y = Standard surface-mounted escutcheon or recessed with the Viking Model E-1, E-2, or E-3 Recessed Escutcheon
Z = Standard surface-mounted escutcheon or recessed with the Viking Model E-1 Recessed Escutcheon

Footnotes

1. Base part number is shown. For complete part number, refer to Viking's current price schedule.
2. Metric K-factor shown is for use when pressure is measured in bar. When pressure is measured in kPa, divide the metric K-factor shown by 10.0.
3. This table shows the listings and approvals available at the time of printing. Check with the manufacturer for any additional approvals.
4. Listed by Underwriters Laboratories Inc. for use in the U.S. and Canada.
5. cULus Listed as corrosion resistant.
6. Other colors are available on request with the same Listings and Approvals as the standard colors.
7. Sprinklers of Ultra-High temperature rating are intended for use inside ovens, dryers, or similar enclosures with normal operating temperatures above 300 °F (149 °C). Where the ambient temperature around the Ultra-High temperature rated sprinkler is significantly reduced below 300 °F (149 °C), the response time of the Ultra-High temperature rated sprinkler may be severely retarded.
8. CE: Standard EN 12259-1, EC-certificate of conformity 0832-CPD-0021.
9. MED Certified, Standard EN 12259-1, EC-certificate of conformity 0832-MED-1003 and 0832-MED-1008.
10. Approved according to China GB standard.
11. CE: Standard EC 12259-1, Declaration of Performance DOP_Sprinklers_LPCB_5-2-19 & DOP_VK102WAX_2-12-19

DESIGN CRITERIA - UL

(Also refer to Approval Chart 1.)

cULus Listing Requirements:

The Viking Micromatic0® Standard Response Pendent Sprinkler VK102 is cULus Listed as indicated in Approval Chart 1 for installation in accordance with the latest edition of NFPA 13 for standard spray sprinklers.

- Designed for use in Light, Ordinary, and Extra Hazard occupancies.
- The sprinkler installation rules contained in NFPA 13 for standard spray pendent sprinklers must be followed.

IMPORTANT: Always refer to Bulletin Form No. F_091699 - Care and Handling of Sprinklers. Also refer to Form No. F_080614 for general care, installation, and maintenance information. Viking sprinklers are to be installed in accordance with the latest edition of Viking technical data, the appropriate standards of NFPA, LPCB, APSAD, VdS or other similar organizations, and also with the provisions of governmental codes, ordinances, and standards, whenever applicable.

Form No. F_031414 20.10.20 Rev 20.1

VIKING®

TECHNICAL DATA

MICROMATIC® STANDARD RESPONSE PENDENT SPRINKLER VK102 (K5.6)

The Viking Corporation, 210 N Industrial Park Drive, Hastings MI 49058
Telephone: 269-945-9501 Technical Services: 877-384-5464 Fax: 269-818-1680 Email: techsvcs@vikingcorp.com
Visit the Viking website for the latest edition of this technical data page www.vikinggroupinc.com

Approval Chart 2 (FM)

Micromatic® Standard Response Pendent Sprinkler VK102
Maximum 175 PSI (12 bar) WWP

KEY: Temperature, Finish, A1X ← Escutcheon (if applicable)

Sprinkler Base Part Number[1]	SIN	Thread Size		Nominal K-Factor		Overall Length		FM Approvals[3] (Refer also to Design Criteria below.)
		NPT	BSPT	U.S.	metric[2]	Inches	mm	
12987	VK102	1/2"	15 mm	5.6	80.6	2-1/4"	57	A1, B2, C3, D1, E4, G1Y, G4Z
12989	VK102	--	15 mm	5.6	80.6	2-1/4"	57	A1, B2, C3, D1, E4, G1Y, G4Z
20229[7]	VK102	--	15 mm	5.6	80.6	2-1/4"	57	E5
NOTICE - Product Below - Limited Availability (Contact Local Viking Office)								
10139	VK102	1/2"	15 mm	5.6	80.6	2-1/4"	57	A1, B2, C3, D1, E4, G1Y, G4Z
10173	VK102	--	15 mm	5.6	80.6	2-1/4"	57	A1, B2, C3, D1, E4, G1Y, G4Z
18020	VK102	1/2"	15 mm	5.6	80.6	2-1/4"	57	A1, B2, C3, D1, G1Y

Approved Temperature Rating Codes

A = 135 °F (57 °C), 155 °F (68 °C), 175 °F (79 °C), 200 °F (93 °C), 212 °F (100 °C), 286 °F (141 °C), and 360 °F (182 °C)
B = 135 °F (57 °C), 155 °F (68 °C), 175 °F (79 °C), 200 °F (93 °C), and 212 °F (100 °C)
C = 286 °F (141 °C)
D = 500 °F (260 °C)[5]
E = 155 °F (68 °C), 175 °F (79 °C), 200 °F (93 °C), 286 °F (141 °C), 360 °F (182 °C), and 500 °F (260 °C)[5]
F = 135 °F (57 °C), 155 °F (68 °C), 175 °F (79 °C), and 200 °F (93 °C)
G = 155 °F (68 °C), 175 °F (79 °C), and 200 °F (93 °C)

Approved Finish Codes

1 = Brass, Chrome, White Polyester[4,6] and Black Polyester[4,6]
2 = Wax-Coated Brass (corrosion resistant)
3 = High Temperature 200 °F (93 °C) Wax Coating (corrosion resistant); maximum ambient temperature allowed at the ceiling = 150 °F (65 °C)
4 = ENT[6]
5 = Chrome

Approved Escutcheon Codes

Y = Standard surface-mounted escutcheon or recessed with the Viking Model E-1, E-2, or E-3 Recessed Escutcheon
Z = Standard surface-mounted escutcheon or recessed with the Viking Model E-1 Recessed Escutcheon

Footnotes

1. Base part number is shown. For complete part number, refer to Viking's current price schedule.
2. Metric K-factor shown is for use when pressure is measured in bar. When pressure is measured in kPa, divide the metric K-factor shown by 10.0.
3. This table shows the listings and approvals available at the time of printing. Check with the manufacturer for any additional approvals.
4. Other colors are available on request with the same Approvals as the standard colors.
5. Sprinklers of Ultra-High temperature rating are intended for use inside ovens, dryers, or similar enclosures with normal operating temperatures above 300 °F (149 °C). Where the ambient temperature around the Ultra-High temperature rated sprinkler is significantly reduced below 300 °F (149 °C), the response time of the Ultra-High temperature rated sprinkler may be severely retarded.
6. FM approved as corrosion resistant.
7. Approved according to China GB standard.

DESIGN CRITERIA - FM

(Also refer to Approval Chart 2.)

FM Approval Requirements:

The Viking Micromatic® Standard Response Pendent Sprinkler VK102 is is FM Approved as standard response **Non-Storage** pendent sprinkler as indicated in the FM Approval Guide. For specific application and installation requirements, reference the latest applicable FM Loss Prevention Data Sheets (including Data Sheet 2-0). FM Global Loss Prevention Data Sheets contain guidelines relating to, but not limited to: minimum water supply requirements, hydraulic design, ceiling slope and obstructions, minimum and maximum allowable spacing, and deflector distance below the ceiling.

NOTE: The FM Installation guidelines may differ from cULus and/or NFPA criteria.

IMPORTANT: Always refer to Bulletin Form No. F_091699 - Care and Handling of Sprinklers. Also refer to Form No. F_080614 for general care, installation, and maintenance information. Viking sprinklers are to be installed in accordance with the latest edition of Viking technical data, the appropriate standards of NFPA, FM Global, LPCB, APSAD, VdS or other similar organizations, and also with the provisions of governmental codes, ordinances, and standards, whenever applicable.

Form No. F_031414 20.10.20 Rev 20.1

VIKING®

TECHNICAL DATA

MICROMATIC® STANDARD RESPONSE PENDENT SPRINKLER VK102 (K5.6)

The Viking Corporation, 210 N Industrial Park Drive, Hastings MI 49058
Telephone: 269-945-9501 Technical Services: 877-384-5464 Fax: 269-818-1680 Email: techsvcs@vikingcorp.com
Visit the Viking website for the latest edition of this technical data page www.vikinggroupinc.com

STANDARD FINISHES

Step 1: Carefully slide the wrench sideways around the protective cap, ensuring engagement with the wrench flats.

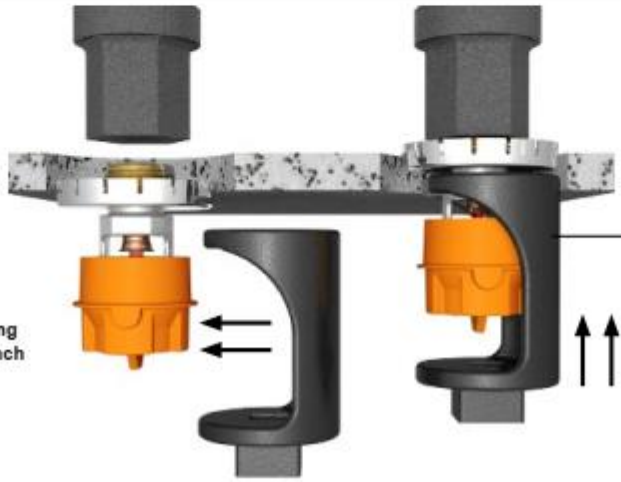

13655W/B*

Step 2: Carefully press the wrench upwards to engage with the wrench flats.

WAX COATED

Step 1: Carefully slide the wrench sideways around the protective cap (not shown), ensuring engagement with the wrench flats.

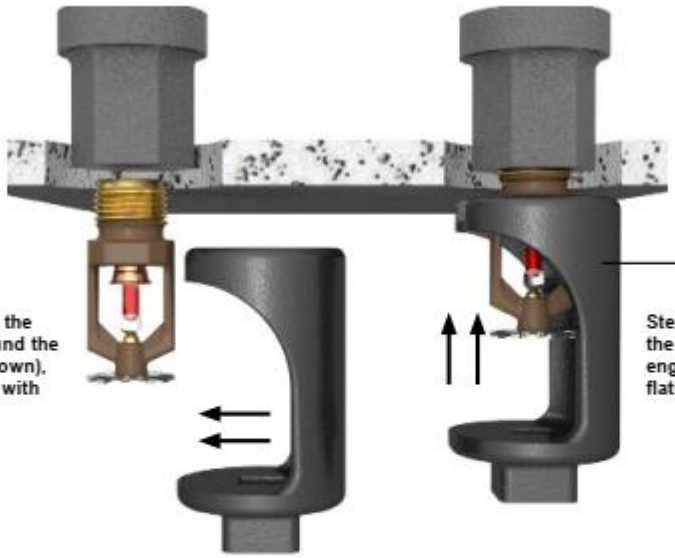

13577W/B*

Step 2: Carefully press the wrench upwards to engage with the wrench flats.

Figure 3: Installation with Recessed Wrenches

*Requires a 1/2 ratchet - not available from Minimax.

Form No. F_031414 20.10.20 Rev 20.1

VIKING®

TECHNICAL DATA

MICROMATIC® STANDARD RESPONSE PENDENT SPRINKLER VK102 (K5.6)

The Viking Corporation, 210 N Industrial Park Drive, Hastings MI 49058
Telephone: 269-945-9501 Technical Services: 877-384-5464 Fax: 269-818-1680 Email: techsvcs@vikingcorp.com
Visit the Viking website for the latest edition of this technical data page www.vikinggroupinc.com

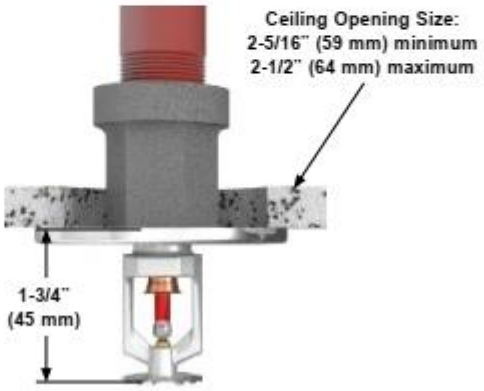

Installed with a standard 1/8" surface-mounted escutcheon

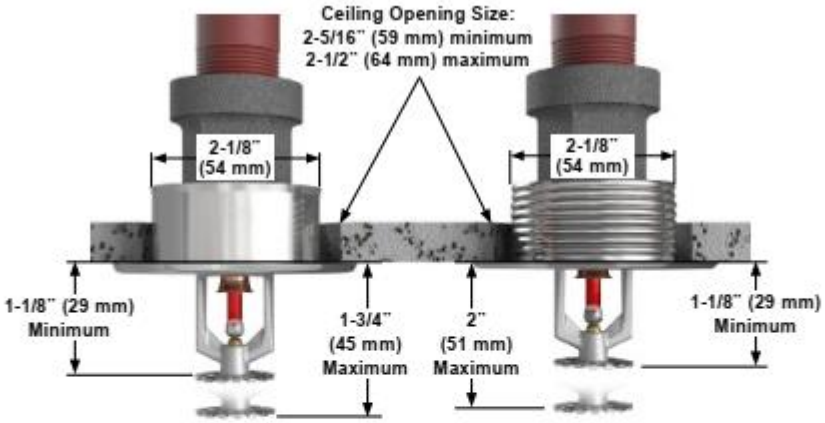

Installed with a Model E-1 Recessed Escutcheon

Installed with a Model E-2 Thread-on Recessed Escutcheon

Figure 4: Installation Dimensions with Escutcheons

VIKING® **TECHNICAL DATA** **WATER MOTOR ALARMS**

The Viking Corporation, 210 N Industrial Park Drive, Hastings MI 49058
Telephone: 269-945-9501 Technical Services: 877-384-5464 Fax: 269-818-1680 Email: techsvcs@vikingcorp.com

1. DESCRIPTION

The Viking water motor alarms are mechanical devices actuated by a flow of water. They are designed to sound a continuous alarm while a sprinkler system operates. An alarm is a required component of every sprinkler system having more than 20 sprinklers.

A. Features

1. The water motor alarms are tapped 3/4" NPT on the inlet and 1" NPT on the drain outlet.
2. The water motor alarm package includes a drive shaft 16-3/4" (425 mm) long for walls 14" (356 mm) thick or less. A special extension shaft is available for walls up to 30-1/4" (768 mm) thick.
3. The package also includes the required 3/4" (20 mm) NPT strainer for installation on the alarm line.
4. Rated water working pressure of Model F-2 is 250 PSI (17.2 bar).

B. Accessories: (order separately)

1. Extension Mounting Cup: Viking Part Number 05957B, Material: 14-Gauge Cold Rolled Steel, UNS-G10080, coated with black E-coat. The extension mounting cup is required when the wall thickness is less than 3" (76.2 mm). Refer to "INSTALLATION" instructions. See Figure 2.
2. Closure Plate: For use with Model F-2 only, Viking Part Number 05820B, Material: 16-Gauge Galvanized Steel, UNS-G10080. The closure plate is required when the Model F-2 Water Motor Alarm gong is mounted on an irregularly surfaced wall. It serves to prevent birds from entering the inside of the gong. The closure plate also serves as a mounting plate for sheet metal walls. Refer to "INSTALLATION" instructions. See Figure 2.
3. Special Extension Shaft: Viking Part Number 03312B, Material: Stainless Steel, UNS-S30400. The extension shaft is required when the F-2 or G-2 Water Motor Alarm is installed on walls from 14" (356 mm) to 30-1/4" (768 mm) thick.

2. LISTINGS AND APPROVALS

Viking Technical Data may be found on The Viking Corporation's Web site at http://www.vikinggroupinc.com. The Web site may include a more recent edition of this Technical Data Page.

Model F-2:

cULus Listed - VPLX

FM Approved - Water Motor Gongs

LPCB Approved

CE - Standard EN 12259-4, EC-certificate of conformity 1725-CPD-H0001

New York City Board of Standards and Appeals - Calendar No. 219-76-SA

Model G-2:

VdS

CE - Standard EN 12259-4, EC-certificate of conformity 1725-CPD-H0001
The 07862 and 07868 Water Motor Alarms Model F-2 and Model G-2 conform to the provision of EN12259-4 standard.
EN12259-4 approvals are provided by:FM Approvals Ltd. 1 Windsor Dials Windsor, Berkshire, UK. SL4 1 RS
Approval Certificate No. issued February 15, 2010.

3. TECHNICAL DATA

Specifications

Available since 1991
Shipping Weight: Model F-2: 11 lbs. (5.0 kg); Model G-2: 13 lbs. (5.9 kg)
Model F-2 Water working pressure: Rated to 300 psi (21 bar); Model G-2 Water working pressure: 175 psi (12 bar)

Material Standards (See Figure 3)

Viking E-coat Spec: SPF02 W01

Ordering Information

Model F-2, Viking Part No. 07862
Model G-2, Viking Part No. 07868

4. INSTALLATION

Locate the water motor on an exterior wall as close as practical to the valve being monitored for water flow. A 3/4" (20 mm) strainer (included) is required on the alarm line as close as possible to the alarm outlet of the valve being monitored for water flow (or outlet of the retard chamber, if used). The location must be easily accessible for cleaning.

Form No. F_082789 Rev 15.1

VIKING® **TECHNICAL DATA** **WATER MOTOR ALARMS**

The Viking Corporation, 210 N Industrial Park Drive, Hastings MI 49058
Telephone: 269-945-9501 Technical Services: 877-384-5464 Fax: 269-818-1680 Email: techsvcs@vikingcorp.com

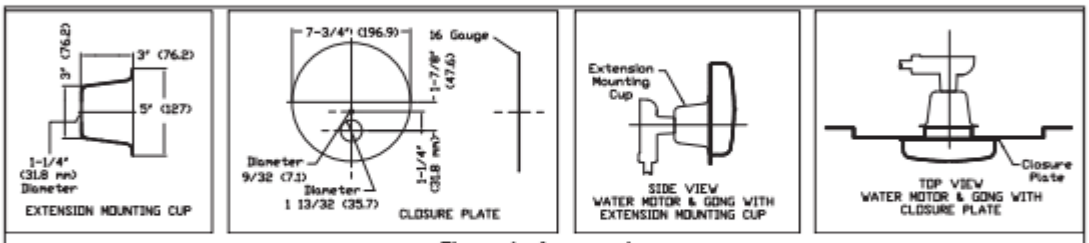

Figure 1: Accessories

A. Cut a 1-7/16" (36.5 mm) minimum to 1-5/8" (41.3 mm) maximum diameter hole in the building wall to accommodate the 3/4" (20 mm) galvanized spacer pipe. (Note: Spacer pipe is NOT included in Water Motor Alarm Package). The hole through the wall must be level or pitched slightly downward toward the water motor.
B. Measure the wall thickness.
C. Cut and thread the spacer pipe to a length equal to: The wall thickness minus 1" (25.4 mm). If the extension mounting cup is used, add an additional 3" (76 mm) to the spacer pipe.
D. Cut the drive shaft (10) to a length equal to: The total wall thickness plus 2-3/4" (70 mm). If extension mounting cup is used, add an additional 3" (76 mm).
E. File the drive shaft to provide a 3/32" (2.4 mm) x 450 chamfer on both corners of both ends. File off all burrs and insert the drive shaft into the hole of the striker arm shaft.
F. Slide the spacer pipe over the shaft and thread the end of the spacer pipe into the gong support assembly coupling (12).
G. Slide the closure plate (if used) over the free end of the spacer pipe, up to the back of the gong. If desired, the closure plate may be fastened to the gong support by using the 9/32" (7.14 mm) diameter hole in the gong support. Use only a flat or round headed fastener that will not interfere with striker arm movement.
H. Position the support assembly on the exterior wall surface by sliding the free threaded end of the spacer pipe into the hole from outside the building.
I. On the inside surface of the wall: Slide the wall plate provided (9), over the free threaded end of the spacer pipe. (If an extension mounting cup is used, place it over the end of the spacer pipe with the flared end toward the wall before sliding the wall plate into position).

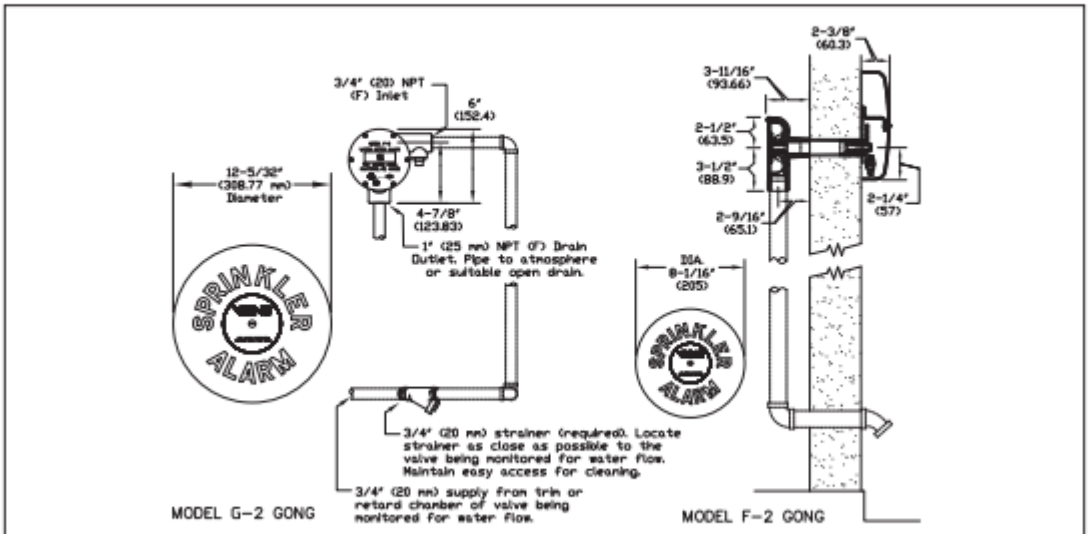

Figure 2

Form No. F_082789 Rev 15.1

VIKING® TECHNICAL DATA WATER MOTOR ALARMS

The Viking Corporation, 210 N Industrial Park Drive, Hastings MI 49058
Telephone: 269-945-9501 Technical Services: 877-384-5464 Fax: 269-818-1680 Email: techsvcs@vikingcorp.com

J. Remove the plastic thread protectors from the threaded openings in the body of the water motor.
K. Attach the water motor assembly by threading the body (3) onto the free threaded end of the spacer pipe. The chamfered ends of the drive shaft allow it to slide into position as the water motor body is threaded onto the spacer pipe. When the assembly is properly tightened, the water motor should be positioned with the 1" (25 mm) NPT drain outlet facing downward and the 3/4" (20 mm) NPT alarm line inlet horizontal. See Figures 1 and 3.
L. Attach the gong, the flat washer, and the gong label (16, 17, and 18) to the gong support installed on the exterior surface of the wall, with the 5/16-18 x 12" (13 mm) screw (19). Note: The flat washer must be installed between the gong and the gong support (17).
M. With galvanized, brass, or other approved corrosion-resistant piping, not less than 3/4" (20 mm) diameter, connect the water motor inlet to the alarm outlet of the waterflow detecting device. A 3/4" (20 mm) strainer (included) is required on the alarm line as close as possible to the alarm outlet of the waterflow detecting device (or outlet of the retard chamber if used). The location must be easily accessible for cleaning.
N. The drain outlet of the impeller housing must discharge to an open drain. Care shall be taken to keep the drain line clean at all times.
O. Note: A water motor drain line that:
   1. Has too many fittings, and/or
   2. Has a very short length of pipe between the 1" (25 mm) outlet and the first elbow in the water motor drain pipe, and/or
   3. Is very long may result in slow drainage and reduced water motor speed. This condition can be remedied by increasing the drain pipe diameter, increasing the length of pipe to the first elbow, and/or pitching the pipe toward the discharge location.

5. OPERATION (See Figure 3)

When a sprinkler system is activated, water flows from the alarm outlet of the valve, through the 3/4" (20 mm) strainer and alarm line piping, into the inlet of the water motor. From the 1/8" inlet orifice, the water flows through a nozzle (4), which restricts the flow into a pressurized stream directed onto the impeller (7). Force from the water stream turns the impeller and drive shaft (10), causing the striker arm (20) to rotate. The striker (25) impacts against the gong (16), producing a continuous alarm. A minimum of 5 PSI (.34 bar) is required at the nozzle to cause a continuous alarm. When properly installed, the Model F-2 Water Motor Alarm produces the required 90 decibel output and the Model G-2 produces 100 decibels. After passing through the water motor, the water is discharged through a 1" (25 mm) drain outlet in the bottom of the impeller housing. The discharged water must be piped through the wall to atmosphere or to a suitable open drain.

6. INSPECTIONS, TESTS AND MAINTENANCE

Weather-resistant materials are used in the construction of the water motor alarm. At regular intervals, examine and test the water motor to ensure that the nozzle and drain line are clean and free of obstruction, and that the alarm functions properly. Also, at regular intervals and before disassembly of the water motor, clean and inspect the alarm line strainer located at the alarm outlet of the waterflow detecting device, or the outlet of the retard chamber, if used. (Note: Some retard chambers may be equipped with a strainer built in). For minimum maintenance and inspection requirements, refer to NFPA 25. In addition, the Authority Having Jurisdiction may have additional maintenance, testing, and inspection requirements that must be followed. Before proceeding with disassembly of the water motor alarm, notify the Authority Having Jurisdiction and occupants of the area covered by the system affected. Take all appropriate precautions. The water motor alarm will be disabled during disassembly.

A. Water Motor Disassembly (See Figure 3)
1. Isolate the water motor alarm by closing the alarm line valve in the trim of the waterflow detecting device. (Refer to appropriate technical data for the system used.)
2. Remove pipe plug (5).
3. Remove all round head machine screws (1) from the water motor cover.
4. Separate the cover (2) and the gasket (6) from the housing (3).
5. Remove the impeller (7).
6. Inspect and, if necessary, carefully clean the nozzle (4) with a wire or pipe cleaner brush.
7. Flush the nozzle way and drain line with water or compressed air.

B. Water Motor Re-Assembly
1. Re-install the pipe plug (5).
2. Re-install the impeller (7).
3. Replace cover gasket (6) and attach cover (2) by using round head machine screws (1).
4. Open the alarm line valve.
5. Test the water motor alarm.
6. When test is complete and water motor alarm operation is satisfactory, place the alarm line valve in the proper "alarm" position. Reset and return the affected systems to service.

7. AVAILABILITY

Viking Water Motor Alarms are available through a network of domestic and international distributors. See the Viking Corp. Web site for closest distributor or contact The Viking Corporation.

8. GUARANTEES

For details of warranty, refer to Viking's current list price schedule or contact Viking directly.

Form No. F_082789 Rev 15.1

VIKING® | TECHNICAL DATA | WATER MOTOR ALARMS

The Viking Corporation, 210 N Industrial Park Drive, Hastings MI 49058
Telephone: 269-945-9501 Technical Services: 877-384-5464 Fax: 269-818-1680 Email: techsvcs@vikingcorp.com

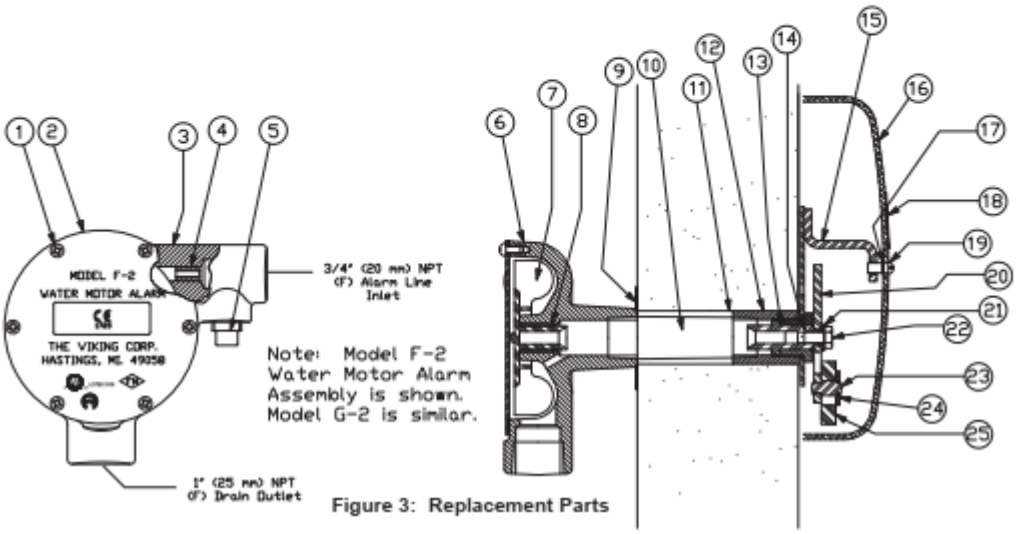

Figure 3: Replacement Parts

ITEM NO.	PART NUMBER F-2	PART NUMBER G-2	DESCRIPTION	MATERIAL	NO. REQ'D
1	*	*	Screw, R. H. Self-tap #10-24 x 3/8" lg.	Zinc Plated Steel	6
2	07867	07870	Cover	Steel	1
3	*	*	Housing	Cast Iron	1
4	*	*	Nozzle	Brass	1
5	01925S	01925S	1/2" Pipe Plug	Cast Iron	1
6	02550B	02550B	Cover Gasket	Cellulose/Nitrile/Glass Blend	1
7	02547C	02547C	Impeller	Delrin	1
8	*	*	Bearing	Brass: Sintered Bronze	1
9	05603A	05603A	Wall Plate	Galvanized Steel	1
10	05604B	05604B	Drive Shaft	Stainless Steel	1
11	--	--	3/4" Pipe (C.O.J.) not furnished	Galvanized Steel	1
12	*	*	Coupling	Brass	1
13	02556B	02556B	Striker Arm Shaft	Celcon Glass Filled	1
14	*	*	Bearing	Brass	1
15	*	*	Gong Support	Stainless Steel	1
16	05821C	06508C	Gong	Aluminum	1
17	02766A	02766A	Flat Washer, 11/32" ID x 11/16" ID x 1/16"	Stainless Steel	1
18	05768A	06505C	Gong Label	Aluminum (F-2), Vinyl (G-2)	1
19	--	--	Screw, B.H. Slotted, 5/16-18 x 1/2" lg.	Stainless Steel	1
20	*	*	Striker Arm	Stainless Steel	1
21	--	--	Flat Washer, 11/32" ID x 11/16" OD x 1/16"	Stainless Steel	1
22	--	--	Screw, H.H. Self-tap 5/16-18 x 1/2" lg.	Zinc Plated Steel	1
23	*	*	Striker Pin	Stainless Steel	1
24	*	*	Striker Arm Washer	Stainless Steel	1
25	*	*	Striker	Canvas Phenolic	1
--Indicates replacement part not available					
*Indicates replacement part only available in a Sub-Assembly listed below					
SUB-ASSEMBLIES					
1-8	07863	07869	Motor Assembly		
20, 23-25	02558B	02558B	Striker Arm Assembly		
12-15, 20-25	05606C	06506C	Support Assembly		

Form No. F_082789 Rev 15.1

VIKING

Alarm Devices

Waterflow Alarm Switch

VSR-EU

Technical Features

- **Service pressure** : Up to 31 bar (450 psi) (16 bar (232 psi) per LPCB, VdS and CE)
- **Flow Sensitivity** :
  15-38 lpm (4-10 gpm) - UL
  30-57 lpm (8-15 gpm) - CE
- **Maximum Surge** : 5.5 m/s, 18 ft/s
- **Switch Contacts** : Two sets of Single Pole Double Throw (SPDT) Form C switch contacts.
  10.0 A @ 125/250 VAC and 2.0 A @ 30 VDC on resistive load.
- **Enclosure** :
  Cover - Die cast with textured red powdercoat finish
  Housing - Cast aluminium
- **Conduit Entrance** : Requires NEMA Type 4 conduit hub for outdoor installations. Two conduit entrances provided for DN15/ 1/2".
- **Environmental Specifications** : Indoor or outdoor use ; Temperature Range : 4.5°C (40°F) to 49°C (120°F) ; NEMA 4/ IP45 Rated Enclosure - when used with proper conduit fittings. (Not for use in hazardous locations)
- **Tamper Protection** : Cover held in place by two tamper resistant screws which require a special key for removal (reference : VSRFKEY). A field installable cover tamper switch is available as an option which may be used to indicate unauthorized removal of the cover.

Retard Adjustment :

The delay can be adjusted by rotating the retard adjustment knob from 0 to the maximum setting. The time delay should be set at the minimum required to prevent false alarms.
Note: A condition of CE approval of this product requires that it has a maximum retard of 30 seconds.

WF Alarm Switch - VSR-EU

Physical Data

Reference	Pipe Size		Installation
	Nominal (metric/inch)	O.D. (mm)	Hole Size (mm/inch)
VSR0200CE	DN50 / 2	60.3	33.0 ± 2 / 1.25 + .125/-.062
VSR0250CE	DN65 / 2 1/2	73.0	33.0 ± 2 / 1.25 + .125/-.062
VSR0250CE	DN65 / 2 1/2	76.1	33.0 ± 2 / 1.25 + .125/-.062
VSR0300CE	DN80 / 3	88.9	50.8 ± 2 / 2.00 ± .125
VSR0400CE	DN100 / 4	114.3	50.8 ± 2 / 2.00 ± .125
VSR0500CE	DN125 / 5	141.3	50.8 ± 2 / 2.00 ± .125
VSR0600CE	DN150 / 6	165.1	50.8 ± 2 / 2.00 ± .125
VSR0600CE	DN150 / 6	168.3	50.8 ± 2 / 2.00 ± .125
VSR0800CE	DN200 / 8	219.1	50.8 ± 2 / 2.00 ± .125

Other sizes and longer retard times are available on models without CE approval. Contact Viking for further details.

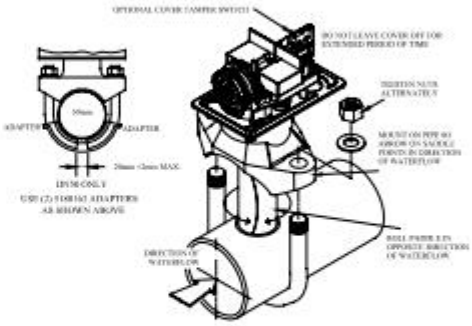

Worldwide Fire Protection

www.viking-emea.com

30-11-2016 Datasheet replaced version of 26-03-2010 (Updated Datasheet denomination)

FIREKING

VIKING

Y-Strainer - Flanged

YSF

Strainers

Technical Features

- Sizes available (Nominal): DN50/2", DN65/2½", DN80/3", DN100/4", DN150/6", DN200/8", DN250/10" and DN300/12"
- Pressure data:
  Working pressure: 21 bar (300 psi)
- Temperature data:
  Working temperature: 0°C - 80°C
- Finish: Fusion bonded epoxy coated internal and external
- Connections: Flange diameter and thickness according to ANSI B16.1 Class 125 or EN1092-2 PN16

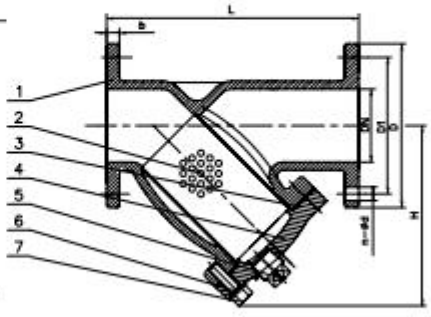

Y-Strainer - Flanged - YSF

Physical Data

Nominal Pipe Size		Dimensions (mm)								Drain Plug	Screen Size (mm)	Reference*		Weight (kg)
Metric	inch	L	D	b	H	D1		n-ØL		BSP Thread		ANSI	PN16	
						ANSI	PN16	ANSI	PN16					
DN50	2"	200	152	16	155	120.7	125	4-Ø19.1		1"	1.5	YSF-0200	YSF-0200PN	8.7
DN65	2½"	254	178	17.5	165	139.7	145	4-Ø19.1		1"	1.5	YSF-0250	YSF-0250PN	12.2
DN80	3"	257	191	19	180	152.4	160	4-Ø19.1	8-Ø19.1	1"	1.5	YSF-0300	YSF-0300PN	13.8
DN100	4"	308	229	24	229	190.5	180	8-Ø19.1	8-Ø19.1	1"	1.5	YSF-0400	YSF-0400PN	23.9
DN150	6"	470	279	25.5	311	241.3	240	8-Ø22.2	8-Ø23	1½"	1.5	YSF-0600		43.8
DN200	8"	549	343	28.5	394	298.5	295	8-Ø22.2	12-Ø23	1½"	2	YSF-0800	YSF-0800PN16	75.4
DN250	10"	654	406	30.5	487	362.0	355	12-Ø25.5	12-Ø28	2"	2	YSF-1000	YSF-1000PN16	109.3
DN300	12"	759	483	32	547	431.8	410	12-Ø25.5	12-Ø28	2"	2	YSF-1200	YSF-1200PN16	173.1

* Valve flange drilling (size and location of bolt holes and pitch circle diameter) allows mating with the following flange types :

ANSI – ANSI B16.1 Class 125	PN16 – DIN 2501, BS 4504, EN 1092 - PN16

Y-Strainer - Flanged - YSF

Screen Data

DN		Hole Dia. (mm)	Free Flow Area (%)
inch	mm		
2"-6"	50-150	1.5	33
8"-12"	200-300	2.0	33

Y-Strainer - Flanged - YSF

Materials List

Item	Description	Material	Specification
1	Valve Body	Ductile Iron	ASTM A536 65-45-12
2	Screen	Stainless Steel	AISI 304 (Perforated)
3	Gasket	EPDM	Commercial
4	Cover	Ductile Iron	ASTM A536 65-45-12
5	Plug	Malleable Iron	Galvanized
6	Bolt	Carbon Steel	Zinc Plated
7	Flat Washer	Carbon Steel	Zinc Plated

16-03-2017 Datasheet updates the version of 07-07-2016 (Changed screen size data)

www.viking-emea.com

"Fireking" is a trademark of The Viking Corporation. Specifications subject to change without notice.

FIREKING

VIKING

Swing Check Valve - Flanged

SCF

Check Valves

Technical Features

- **Sizes available (Nominal):** 2"/DN50, 2-1/2"/DN65, 3"/DN80, 4"/DN100, 6"/DN150, 8"/DN200, 10"/DN250 & 12"/DN300
- **Pressure data:**
  Working Pressure: 21 bar (300 psi).
- **Working Temperature:** 0°C to 80°C
- **Seat Type:** Bronze clapper face ring and valve body seat
- **Finish:** Fusion bonded epoxy coated interior & exterior
- **Connections:** Flange diameter and thickness according to ANSI B16.1 Class 125, EN1092-2 PN10 or EN1092-2 PN16
- **Specifications:** Complys with AWWA C508, clear water-way design.

Note: Check valves may be damaged by excessively turbulent water flow. Model SCF check valves should be installed a reasonable distance from pumps, elbows, expanders, reducers, or similar devices. Typical piping practices suggest a minimum distance of five times the pipe diameter for general use

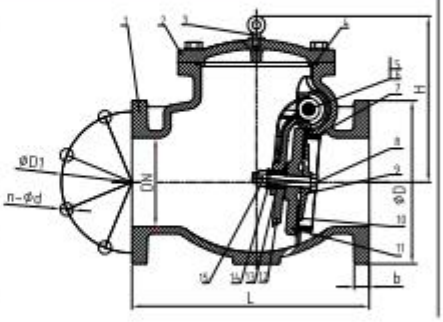

Swing Check Valve - Flanged - SCF

Physical Data

Part number*			Nominal pipe size		Dimensions (mm)										Weight (kg)
ANSI	PN10	PN16	Metric	inch	L	D	b	H	D1			n-ØL			
									ANSI	PN16	PN10	ANSI	PN16	PN10	
SCF-0200	SCF-0200PN		DN50	2"	203	152	16	133	120.5	125		4-Ø19.1			11.2
SCF-0250	SCF-0250PN		DN65	2-1/2"	254	178	17.5	150	139.5	145		4-Ø19.1			16.7
SCF-0300	SCF-0300PN		DN80	3"	279	191	19	150	152.5	160		4-Ø19.1	8-Ø19.1		22.5
SCF-0400	SCF-0400PN		DN100	4"	330	229	24	218	190.5	180		8-Ø19.1	8-Ø19.1		34.9
SCF-0600			DN150	6"	406	279	25.5	290	241.5	240		8-Ø22.2	8-Ø23		65.2
SCF-0800	SCF-0800PN10	SCF-0800PN16	DN200	8"	495	343	28.5	330	298.5	295		8-Ø22.2	12-Ø23	8-Ø23	120.7
SCF-1000	SCF-1000PN10	SCF-1000PN16	DN250	10"	622	406	30.5	350	362	355	350	12-Ø25.4	12-Ø28	12-Ø23	180.9
SCF-1200	SCF-1200PN10	SCF-1200PN16	DN300	12"	660	483	32	375	432	410	400	12-Ø25.4	12-Ø28	12-Ø23	242.3

* Valve flange drilling (size and location of bolt holes and pitch circle diameter) allows mating with the following flange types. ** Not UL or FM

ANSI = ANSI B16.1	PN10 = DIN 2501, EN 1092 - PN10	PN16 = DIN 2501, EN 1092 - PN16

Swing Check Valve - Flanged - SCF

Materials List

Item	Description	Material	ASTM Specifications
1	Body	Ductile iron	ASTM A536 65-45-12
2	Bonnet	Ductile iron	ASTM A536 65-45-12
3	Eyebolt	Zinc plated carbon steel	
4	O-ring	NBR	Commercial
5	Hinge pin	Stainless steel	AISI 304
6	Hinge bushing	Brass	ASTM B36
7	Seat ring	Bronze	ASTM B62
8	Disc seat bolt	Stainless steel	AISI 304
9	Retainer washer	Bronze	ASTM B62
10	Disc sealing ring	EPDM	Commercial
11	Disc	Ductile iron	ASTM A536 65-45-12
12	Clapper arm	Ductile iron	ASTM A536 65-45-12
13	Stud bushing	Brass	ASTM B36
14	O-ring	NBR	Commercial
15	Nuts	Stainless steel	AISI 304

17-10-2017 Updates datasheet of 08-06-2016 (added note at end of Technical Features)

www.viking-emea.com

Fireking™ is a trademark of The Viking Corporation. Specifications subject to change without notice.

FIREKING

VIKING

Control Valves

Non-Rising Stem (NRS) EN1171 Gate Valve - Flanged

NRF11

Technical Features

- **Sizes available (Nominal) :** DN50/2", DN65/2-1/2", DN80/3", DN100/4", DN125/5", DN150/6", DN200/8", DN250/10" and DN300/12"
- **Working Pressure :** 16 bar (232 psi)
- **Wedge type :** Resilient EPDM fully encapsulated
- **Finish :** Fusion bonded epoxy inside and outside
- **Approvals :** VdS Approved
- **Connections :** Flange diameter and thickness according to EN1092-2 PN16, and flange drilling can be in accordance with EN1092-2 PN10 for size 8"/DN200, 10"/DN250 and 12"/DN300 according to request
- **Specification :** Design and dimensions conform to EN1171
- **Supervision :** Integral bracket allows monitoring of valve in open position using supervisory switch, P/N 828482. For monitoring closed position part number NRF-SB is required

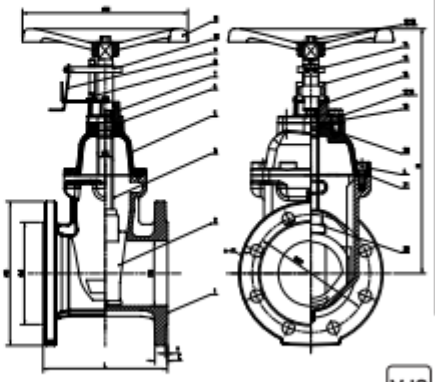

VdS

Non-Rising Stem (NRS) EN1171 Gate Valve - Flanged - NRF11

Physical Data

Reference	Nominal Pipe Size Metric	Nominal Pipe Size inch	Flange Type and Drilling	Dimensions (mm) L(F4)	H	D	D1	d	C	T	ØM	n-ØL	Weight (kg)
NRF11-0200PN (923433)	DN50	2"	PN10 PN16	150	282	165	125	99	19	3	180	4-Ø19	10.25
NRF11-0250PN (923432)	DN65	2-1/2"	PN10 PN16	170	290	185	145	118	19	3	180	4-Ø19	12.27
NRF11-0300PN (923431)	DN80	3"	PN10 PN16	180	331	200	160	132	19	3	200	8-Ø19	16.31
NRF11-0400PN (923430)	DN100	4"	PN10 PN16	190	366	220	180	156	19	3	254	8-Ø19	21.12
NRF11-0500PN (923429)	DN125	5"	PN10 PN16	200	447	250	210	184	19	3	280	8-Ø19	32.60
NRF11-0600 (923428)	DN150	6"	PN10 PN16	210	490	285	240	211	19	3	305	8-Ø23	42.21
NRF11-0800PN10 (923427)	DN200	8"	PN10	230	560	340	295	266	20	3	350	8-Ø23	57.28
NRF11-0800PN16 (923426)			PN16									12-Ø23	
NRF11-1000PN10 (923425)	DN250	10"	PN10	250	706	405	350	319	22	3	450	12-Ø23	105.62
NRF11-1000PN16 (923424)			PN16				355					12-Ø28	
NRF11-1200PN10 (923423)	DN300	12"	PN10	270	802	460	400	370	24.5	4	450	12-Ø23	169.02
NRF11-1200PN16 (923422)			PN16				410					12-Ø28	

Non-Rising Stem (NRS) EN1171 Gate Valve - Flanged - NRF11

Materials List

Item	Description	Material	Specification	Item	Description	Material	Specification
1	Valve Body	Ductile Iron	EN-GJS-450-10	13	Flat Washer	Carbon Steel	Zinc Plated
2	Resilient wedge disc	Ductile Iron	EN-GJS-450-10 & EPDM	14	Bolt	Stainless Steel	SS304
3	Stem	Stainless Steel	2Cr13	15	Fixed Plate	Stainless Steel	SS316
4	Bolt	Carbon Steel	Zinc Plated	16	Ring Wiper	EPDM	Commercial
5	Bonnet	Ductile Iron	EN-GJS-450-10	17	Bolt	Carbon Steel	Zinc Plated
6	O-Ring	NBR	Commercial	18	Flat Washer	Carbon Steel	Zinc Plated
7	Gland	Ductile Iron	EN-GJS-450-10	19	O-Ring	EPDM	Commercial
8	Position Fixing Spindle	Stainless Steel	SS316	20	Thrust Washer	Brass	HPb59-1
9	Limit Plate	Stainless Steel	SS316 See 23	21	Bonnet Gasket	EPDM	Commercial
10	Position Fixing Plate	Stainless Steel	SS316	22	Wedge Nut	Brass	C95400
11	Handwheel	Ductile Iron	EN-GJS-450-10	23	Switch bracket for NRF11 Valve - Part Number: NRF-SB		
12	Bolt	Carbon Steel	Zinc Plated				

www.viking-emea.com

Fireking™ is a trademark of The Viking Corporation. Specifications subject to change without notice.

03-04-2018 Datasheet updates the datasheet of 24-04-2017 (Change description of item 2 in materials list)

FIREKING VIKING

Non-Rising Stem (NRS) EN1171 Gate Valve - Flanged

NRF11

Control Valves

Installation

1. Piping systems and valves should be thoroughly cleaned and free from ingress of foreign materials.
2. Visually inspect the valve seating and ports for cleanliness immediately prior to installation.
3. All valves should be independently supported against movement and stress from the connected piping system.
4. Ensure that the valve pressure rating is compatible with service conditions.
5. Operate the valve at least once from the open to closed position.
6. Verify that packing nuts are tight before pressurizing the system.
7. Gate valves are not suitable for throttling applications.
8. Gate valves should be installed in the vertical position on horizontal pipework and in the horizontal position on vertical pipework.

Operation

Gate valves are manually operated multi-turn valves and are opened by a handwheel or other operating device, generally in a counter clockwise direction and then closed clockwise.

Closing Torque for Gate Valve Handwheel		
Size		Closing Torque Nm
2"	DN50	27
2½"	DN65	38
3"	DN80	65
4"	DN100	80
5"	DN125	100
6"	DN150	125
8"	DN200	160
10	DN250	240
12"	DN300	300

Inspection and Maintenance

1. Valves should be inspected periodically and should be cycled to prevent buildup of foreign materials in the piping system and valve body.
2. Always shut down the system before repacking the valve. Valves are designed with backseats for repacking under pressure but this is not recommended.

03-04-2018 Datasheet updates the datasheet of 24-04-2017 (Change description of item 2 in materials list)

www.viking-emea.com

Fireking™ is a trademark of The Viking Corporation. Specifications subject to change without notice.

MINIMAX

Technisches Datenblatt
technical data sheet

M2-10-03 Teil 2
part 2

Ergänzung / *amendment: 11.05*

Prüfgeräte für Strömungsmelder — *test devices for waterflow detector*

Maße in **mm**; Gewicht **in kg/St.** — *dimensions in **mm**; weight in **kg/pc***

K20 **mit / ohne** festen Anschluss
*K20 **with / without** fastened connection*

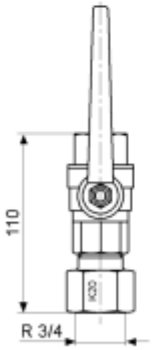

K30 **ohne** festen Anschluss
*K30 **without** fastened connection*

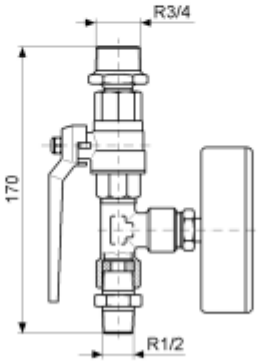

K30 **mit** festem Anschluss
*K30 **with** fastened connection*

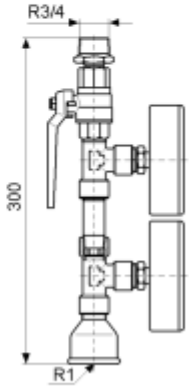

Prüfgerät Strömungsmelder *testing device waterflow detector*	Art.-Nr. *order no.*	Gewicht *weight*
K20 **mit / ohne** festen Anschluss *K20 **with / without** fastened connection*	88 0123 (LG)	0,5
K30 **ohne** festen Anschluss *K30 **without** fastened connection*	78 5605 (LG)	1,1
K30 **mit** festem Anschluss *K30 **with** fastened connection*	77 3386 (LG)	2,0

(LG) = lagerhaltig — *(LG) = available from stock*

Instandhaltung: ..... Sichtkontrolle
Produktinformation: ..... -/-
Ersatzteile: ..... -/-

maintenance: ..... *visual check*
product information: ..... *-/-*
spare parts: ..... *-/-*

mitgeltende Blätter:
Manometer 16 bar - ER 2MAZ M1-12-01
Kugelhahn 3/4 - PN40 ..... M2-04-15

sheets also applying:
pressure gauge 16 bar - ER 2 pointers M1-12-01
ball valve 3/4 - PN40 ..... M2-04-15

Anwendung Prüfgerät Strömungsmelder

K20 **mit / ohne** festen Anschluss:
- Nassanlagen mit einem Mindestbetriebsdruck von 8,2 bar (am Prüfgerät);
- zum festen Anschluss an das Abwassernetz oder für freien Auslauf.

K30 **ohne** festen Anschluss:
- Nassanlagen mit einem Mindestbetriebsdruck von 3,6 bar (am Prüfgerät);
- für freien Auslauf.

K30 **mit** festem Anschluss:
- Nassanlagen mit einem Differenzdruck von 3,6 bar (am Prüfgerät);
- zum festen Anschluss an das Abwassernetz.

application testing device waterflow detector

*K20 **with / without** fastened connection:*
- *wet pipe systems with a minimum pressure of 8,2 bar (at the point of the test device);*
- *for use in a piping with a fixed connection with the sewage system or for open discharge.*

*K30 **without** fastened connection:*
- *wet pipe systems with a minimum pressure of 3,6 bar (at the point of the test device);*
- *for open discharge.*

*K30 **with** fastened connection:*
- *wet pipe systems with a pressure difference of 3,6 bar (at the point of the test device);*
- *for use in a piping with a fixed connection with the sewage system.*

Erstellt:

Dieses Dokument unterliegt im ausgedruckten Zustand nicht dem Änderungsdienst.
This printed document is not part of the change service.

Freigabe:

Seite / *page* 1/1

Produktblatt I Wasser – *Product Sheet I Water*

MINIMAX

M2-53-03 Teil 1

Ergänzung / *amendment: 04.23* *part 1*

Zubehör Speisevorrichtung EconAqua

accessories water refill unit EconAqua

Abb.: Art.-Nr. 918950 / *fig.: part no. 91850*

Instandhaltung / *maintenance*
siehe Einzelkomponenten / *see single components*

Technische Beschreibung / *technical description*
Art.-Nr. 824944 (de/en) / *part no. 824944 (de/en)*

Ersatzteile / *spare parts*
siehe Einzelkomponenten / *see single components*

Bezeichnung *designation*	DN_1 / DN_2	Schwimmer-ventile *float valves*	Art.-Nr. / *part no.*		Gewicht *weight* ca. / *approx.* [kg]
			ohne Überwachung *without monitoring*	mit Überwachung *with monitoring*	
Zubehör Speisevorrichtung DN80 EconAqua *accessories water refill unit DN80 EconAqua*	80 / 50 EconAqua	2	918948	918950	135

Verwendung
Für den Einsatz im Trinkwasserbereich geeignet.

application
suitable for the use in drinking water systems

mitgeltende Blätter
Steinfänger KTW mit Feinsieb M2-02-11
Schieber AVK blau - KTW M2-02-08
Schwimmerventil - SV2 kompl. M2-02-13
zusätzlich bei Zubehör Speisevorrichtung mit Überwachung:
Zubehör Überwachung Schieber AVK M2-02-08
Endschalter Überwachung FMZ M20x1,5 ..... M2-05-05
Überwachung Druck PMÜ-3 ..... M2-05-06

sheets also applying
strainer KTW with fine sieve M2-02-11
gate valve AVK blue - KTW M2-02-08
float valve - SV2 complete M2-02-13
additionally at accessories water refill unit with monitoring:
accessories for monitoring gate valve AVK M2-02-08
limit switch for monitoring FMZ M20x1,5 ..... M2-05-05
monitoring for pressure PMÜ-3 ..... M2-05-06

Lieferumfang
Zubehör Speisevorrichtung mit Flanschdichtungen und Flanschschrauben in Einzelteilen geliefert.
Technische Beschreibung:
- Zubehör Speisevorrichtung (de/en) 824944
- Zwischenbehälter (de/en) 826448
- Schwimmerventil (de/en) 820770

included in delivery
accessories water refill unit with flange seals and flange screws delivered in single parts
technical description:
- accessories water refill unit (de/en) 824944
- intermediate tank (de/en) 826448
- float falve (de/en) 820770

nicht im Lieferumfang enthalten
Verteiler für Speisevorrichtung M2-02-03
Spüleinrichtung, optional M2-02-14

not included in delivery
manifold for water refill unit M2-02-03
flushing device, optional M2-02-14

M2_5303_001 / 2023-No v01
Technische Änderungen ohne vorherige Mitteilung vorbehalten. Alle Rechte vorbehalten.
The contents of this publication are subject to modifications without notice. All rights reserved

Minimax GmbH | Industriestr. 10/12 | 23840 Bad Oldesloe | water@minimax.de | www.minimax.com

Produktblatt I Wasser – *Product Sheet I Water*

MINIMAX

M2-53-03 Teil 1

Ergänzung / *amendment: 04.23* *part 1*

Zubehör Speisevorrichtung EconAqua

accessories water refill unit EconAqua

Maßzeichnung / *dimension drawing*
Maße in mm / *dimensions in mm*

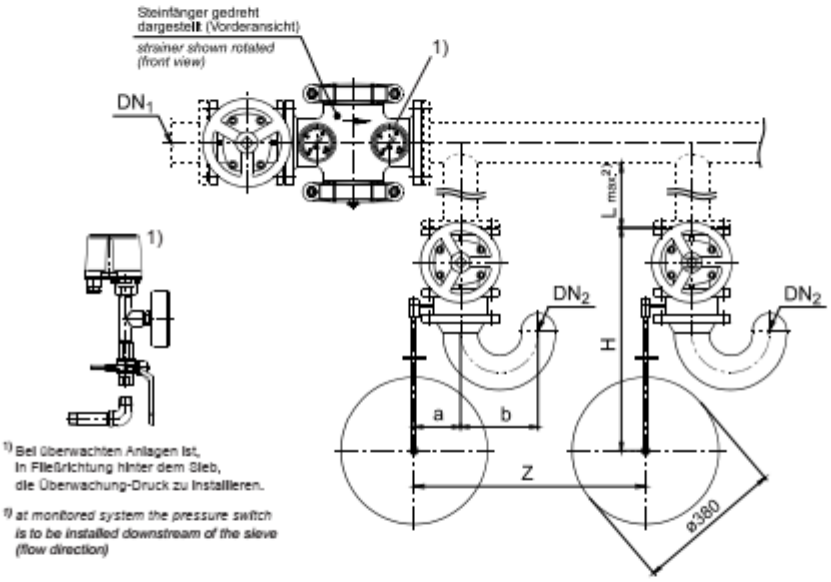

1) Bei überwachten Anlagen ist, in Fließrichtung hinter dem Sieb, die Überwachung-Druck zu installieren.

1) at monitored system the pressure switch is to be installed downstream of the sieve (flow direction)

DN_1 / DN_2	Schwimmer-ventile *float valves*	H	Z	a	b	L 2) max.
80 / 50 EconAqua	2	722	500	105	140	500

2) Wird L max. überschritten muss nach DIN1988-600 jeder Schwimmer-ventilstutzen mit einer automatischen Spüleinrichtung versehen werden.

2) according to DIN1988-600 each float valve connection has to be provided with an automatic flushing device if L max. is exceeded

Technische Änderungen ohne vorherige Ankündigung vorbehalten. Alle Rechte vorbehalten.
The content of this publication are subject to modifications without notice. All rights reserved.
M2_5303_001 / 2023-Nov-01

2/2

Minimax GmbH | Industriestr. 10/12 | 23840 Bad Oldesloe | water@minimax.de | www.minimax.com

M2-03-11 Teil 3

Ergänzung / *amendment: 01.15* *part 3*

Kompressor Classic 460-50 W

Maße in **mm**; Gewicht in **kg/St.**

compressor Classic 460-50 W

*dimensions in **mm**; weight in **kg/pc***

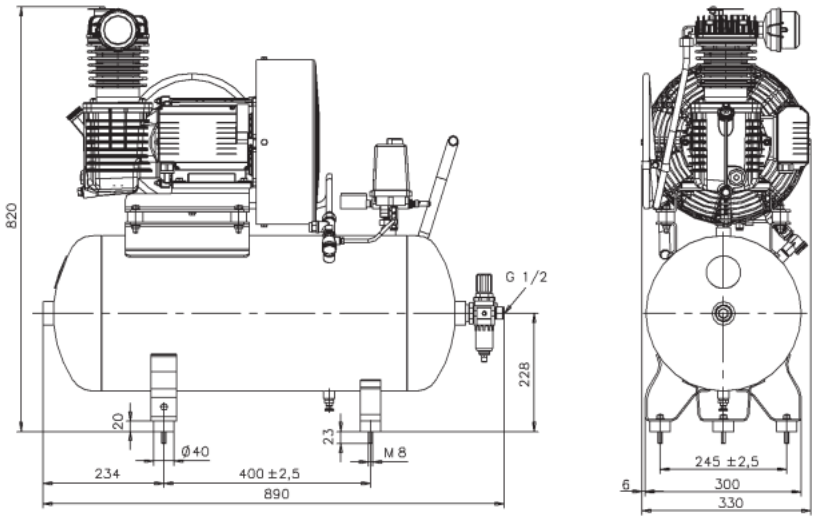

Bezeichnung *designation*	Art.-Nr. *part no.*	Gewicht *weight*
Kompressor Classic 460-50 W *compressor Classic 460-50 W*	848214	63

Instandhaltung: .....gemäß beiliegender .....Betriebsanleitung des Herstellers

Technische Beschreibung: .....-/-

Ersatzteile:
- Luftfilter M22x1,5 848216
- Dichtungssatz Kompressor 460-50 W ...848219
- Reparatur-Kit Winkelrückschlagventil ...848217
- Öl Kompressor 1 Liter-Mobil Rarus 427 ...841556 (zum Nachfüllen der Kompressoraggregate)
- Dichtung Ölablassschraube (10 Stück) ...920419

maintenance: *.....according to the enclosed .....operating instructions of the manufacturer*

technical description: *.....-/-*

spare parts:
- *air cleaner M22x1,5 .....848216*
- *sealing set compressor 460-50 W 848219*
- *repair-kit for elbow check valve 848217*
- *oil type Mobil Rarus 427 (1 litre) .....841556 (for filling-up of the compressor sets)*
- *gasket oil drain plug (10 piece) 920419*

Techn. Daten:

Typ .....Classic 460-50 W
Ansaugmenge, theoretisch .....460 l/min
Liefermenge eff. bei 2,5 bar .....301 l/min
Zylinderanzahl 1
Behältervolumen .....50 l
Kompressorblock .....KC 390
Nenndrehzahl .....1500 min^{-1}
Nennleistung .....2,2 kW
cos φ 0,96
zulässige Schalthäufigkeit .....max. 20 pro Stunde
Schutzart IP44
Nennstrom .....13,0 A
Nennspannung .....230 V, 1~, 50 Hz
Betriebsüberdruck .....max. 10 bar
Anprechduck Sicherheitsventil .....10,5 bar
Druckschalter Einschaltdruck .....8,8 bar
Ausschaltdruck .....10,0 bar
Druckluftanschluss .....G1/2, Innengewinde

technical data:

type .....Classic 460-50 W
suction quantity, theoretic .....460 l/min
eff. supply quantity at 2,5 bar .....301 l/min
no. of cylinders 1
vessel volume .....50 l
compressor block .....KC 390
nominal speed .....1500 min^{-1}
nominal power .....2,2 kW
cos φ 0,96
allowable switching cycles .....max. 20 per hour
IP code IP44
nominal current .....13,0 A
nominal voltage .....230 V, 1~, 50 Hz
working overpressure .....max. 10 bar
response pressure for safety valve .....10,5 bar
pressure switch starting pressure .....8,8 bar
stop pressure .....10,0 bar
compressed air connection .....G1/2, internal thread

M2_0311_003
Technische Änderungen ohne vorherige Ankündigung vorbehalten. Alle Rechte vorbehalten.
The contents of this publication are subject to modifications without notice. All rights reserved.

© Viking S.A. | Z.I. Haneboesch | L-4562 Differdange/Niederkorn | www.viking-emea.com |

M2-03-11 Teil 3

Ergänzung / *amendment: 01.15* *part 3*

Kompressor Classic 460-50 W

Techn. Daten:
Ölfüllmenge .....0,2 l
garant. Schallleistungspegel .....97 dB (A),
.....nach RL 2000/14/EG
Umgebungstemperatur .....+5 °C bis +35 °C
Verwendungshöhe über NN .....max. 1000 m

Hinweis:
Gemäß BetrSichV ist der Betreiber verpflichtet, für den Druckbehälter eine Prüfung der Aufstellung durchzuführen. Diese kann durch einen Sachverständigen oder eine befähigte Person gemäß TRBS 1203 erfolgen.
Außerhalb Deutschlands sind die entsprechenden national geltenden Gesetze, Richtlinien, Normen und Regelungen einzuhalten.

Lieferumfang:
- Verwendungsfertiges Aggregat gemäß BetrSichV
- Druckluftbehälter mit Innenbeschichtung, mit Kondensatwasserablasshahn
- automatische Regelung über Druckschalter mit EIN/AUS-Schalter
- inkl. Manometer und Filterdruckminderer
- inkl. 5 m Anschlusskabel mit Stecker
- inkl. Ansaugfilter mit Geräuschdämpfer
- inkl. Montagesatz, bestehend aus: 3 Stck. beidseitig verschraubbaren Gummifüßen D40x20 mit Stehbolzen M8x23, sowie Unterlegscheiben und Muttern (Dübel zur Bodenbefestigung sind extra zu bestellen)
- inkl. Betriebshandbuch bestehend aus: Betriebsanleitung und Wartungsanleitung in deutsch (Betriebshandbücher in anderen Sprachen müssen gesondert bestellt werden)

nicht im Lieferumfang enthalten:
Zubehör Kompressor ..... M2-03-11 Teil 1
sowie Dübel, Rohre und Fittinge (baustellenabhängig)

BetrSichV = Betriebssicherheitsverordnung
TRBS = Technische Regeln für Betriebssicherheit

compressor Classic 460-50 W

technical data:
filling quantity of oil .....0,2 l
guaranteed sound power level .....97 dB (A),
.....in acc. to RL 2000/14/EG
temperature range .....+5 °C up to +35 °C
usage height above sea level .....max. 1000 m

note:
According to the German BetrSichV the operator is obliged to carry out an inspect of the installation of the pressure vessel. The inspect can be carried out by an authorized inspector or qualified person according to German TRBS 1203.
Outside of Germany the appropriate national valid laws, directives, standards and policies have to be observed.

included in delivery:
- *ready-for-use aggregate according to German BetrSichV*
- *vessel with internal coating, with drain cock for condensate*
- *automatically controlled by pressure switch with On/Off switch*
- *incl. pressure gauges and filter pressure reducing valve*
- *incl. 5 m connecting cable with mains plug*
- *incl. intake filter with silencer*
- *incl. installation kit, consisting of: 3 rubber feet D40x20 with studs M8x23 on both sides, washers and nuts (anchors for fixing on the basement have to be ordered separately)*
- *incl. operating manual consisting of: German operating instructions and maintenance manual (operating manuals of other languages have to be ordered separately)*

not included in delivery:
accessories compressor .....M2-03-11 part 1
as well as anchors, pipes and fittings (depends on site)

BetrSichV = Ordinance in Industrial Safety and Health
TRBS = Technical Rules for Industrial Safety

Liefermengendiagramm KC 390 / *supply quantity diagram KC 390*

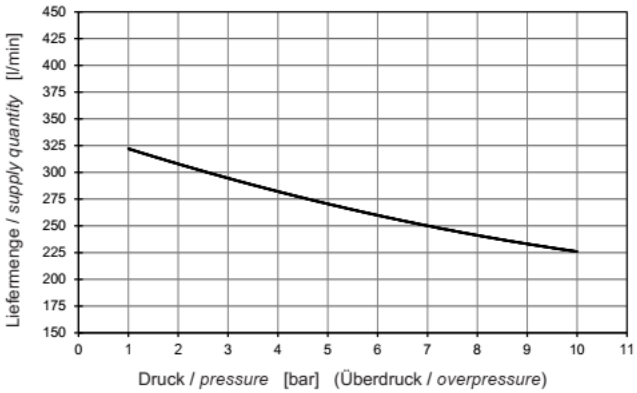

Technische Änderungen ohne vorherige Ankündigung vorbehalten. Alle Rechte vorbehalten.
The contents of this publication are subject to modifications without notice. All rights reserved.
M2_0311_003

© Viking S.A. | Z.I. Haneboesch | L-4562 Differdange/Niederkorn | www.viking-emea.com |

1.5 SPISAK KORIŠĆENIH PROPISA I LITERATURE

1. Zakon o planiranju prostora i izgradnji objekata (Sl.list CG br.064/17, 044/18, 063/18)
2. Pravilnik o načinu izrade i sadržini tehničke dokumentacije za građenje objekata (Sl.list CG br. 044/18)
3. Zakon o zaštiti i zdravlju na radu (Sl.list CG br. 34/14, 044/18)
4. Pravilnik o opštim mjerama zaštite na radu za građevinske objekte namijenjene za radne i pomoćne prostorije, Sl.glasnik SRS br. 29/87
5. Zakon o zaštiti i spašavanju (Sl.list CG br. 13/07, 5/08, 32/11, 054/16)
6. MEST EN 12845:2016

2. NUMERIČKA DOKUMENTACIJA

2.1 PRORAČUNI

1. POTREBNA KOLIČINA VODE ZA SPRINKLER SISTEM

Proračun potrebne količine vode za sprinkler sistem urađen je prema MEST EN 12845:2016 standardu. Parametri stabilnog sistema za gašenje požara određeni su prema pregledu Tabele 3.

Prilog Annex A, tabela A.2, prikazuje osnovne grupe proizvoda (proizvodnih i tehnoloških procesa) prema stepenu opasnosti razvitka požara u zavisnosti od njegove funkcionalne namjene i požarnog opterećenja sagorivog materijala. Objekat, odnosno štićeni prostori po svojoj namjeni i karakteru su svrstani u grupe prostorija sa požarnim opterećenjem OH1 (fiskulturna sala kao lokacija proračuna, usljed velike visine).

Iz pregleda Tabele 3 za požarnu opasnost OH1 dobijeni su sledeći parametri stabilnog sistema za gašenje požara vodom:

- Minimalna brzina dotoka vode: 5 l/min m^2
- Dejstvujuća površina za suvi sistem: 90 m^2
- Minimalno pogonsko vrijeme: 60 min
- Maksimalna štićena površina po sprinkler mlaznici: 12 m^2
- Maksimalno rastojanje između sprinkler mlaznica: 4 m

Na osnovu gornjih podataka proračunom se dobija minimalna (teorijska) potrošnja vode za sistem sa sprinkler mlaznicama:

$$\mathbf{Q_{SOH}} = 5 \times 90 = 450 \text{ l/min}$$

Zbog nejednolikosti mreže za potrošnju vode, uzima se 40% više od minimalne (teorijske) potrošnje vode:

$$\mathbf{Q'_{SOH}} = 450 \times 1{,}4 = 630 \text{ l/min}$$

Tačna količina vode neophodna za gašenje požara, dobijena je hidrauličkim proračunom, čiji je izvještaj dat u nastavku.

EN 12845:2015 (E)

Table 3 — Design criteria for LH, OH and HHP

Hazard Class	Design Density mm/min	Area of Operation m^2	
		Wet or pre-action	Dry or alternate
LH	2,25	84	Not allowed Use OH1
OH1	5,0	72	90
OH2	5,0	144	180
OH3	5,0	216	270
OH4	5,0	360	Not allowed Use HHP1
HHP1	7,5	260	325
HHP2	10,0	260	325
HHP3	12,5	260	325
HHP4	deluge (see NOTE)		
NOTE Needs special consideration. Deluge systems are not covered by this standard.			

Annex A
(normative)

Classification of typical hazards

Tables A1, A.2 and A.3 contain lists of minimum hazard classification. They shall also be used as guidance for occupancies not specifically mentioned. They shall be read in conjunction with 6.2.

Table A.1 — Light Hazard occupancies

Schools and other educational institutions (certain areas) *see* 6.2.2
Offices (certain areas) *see* 6.2.2
Prisons

Table A.2 — Ordinary Hazard occupancies

Occupancy	Ordinary hazard group			
	OH1	OH2	OH3	OH4
Glass and ceramics			Glass factories	
Chemicals	Cement works	Photographic film factories	Dyers works soap factories Photographic laboratories Paint application shops with water based paint	
Engineering	Sheet metal product factories	Metal working	Electronics factories Radio equipment factories Washing machine factories Car workshops	
Food and beverages		Abattoirs, meat factories Bakeries Biscuit factories Breweries Chocolate factories Confectionery *Dairies* Factories	Animal fodder factories Corn mills Dehydrated vegetable and soup factories Sugar factories	Alcohol distilleries
Miscellaneous	Hospitals Hotels Libraries (excluding book stores) Restaurants Schools (see	Laboratories (physical) Laundries Car parks Museums	Broadcasting studios (small) Railway stations Plant (technical) room Farm building	Cinemas and theatres Concert halls tobacco factories Film and TV Production Studio

Occupancy	Ordinary hazard group			
	OH1	OH2	OH3	OH4
	6.2.2) Offices (see 6.2.2)			
Paper			Book binding factories cardboard factories paper factories	Waste paper processing
Shops and offices	Data processing (computer room, excluding tape storage) Offices see 6.2.2		Department stores shopping centre	Exhibition halls[a]
Textiles and clothing		Leather goods factories	Carpet factories (excluding rubber and foam plastics) Cloth and clothing factories fibre board factories Footwear factories (excluding plastics and rubber) Knitting factories linen factories Mattress factories (excluding foam plastics) Sewing factories weaving mills Woolen and worsted mills	Cotton mills Flax preparation plants Hemp preparation plants
Timber and wood			Woodworking factories Furniture factories (without foam plastics) Furniture showrooms Upholstery (without foam plastics) factories	Saw mills Plywood factories

NOTE Where there is painting or other similar high fire load areas in a OH1 or OH2 occupancy, they should be treated as OH3.

[a] Excessive clearance shall be taken into consideration.

2. DIMENZIONISANJA CIJEVNIH INSTALACIJA

Dimenzionisanje cijevnih vodova je urađeno u skladu sa EN 12845 propisima, koji propisuje da brzina vode u cjevovodima ne smije biti veća od 10 m/s.
Pored zahtjeva za brzinu proticanja, ispoštovan je i zahtjev da radni pritisak vode na sprinkler mlaznici ne smije biti manji od 0,35 bar.

3. IZBOR SPRINKLER MLAZNICA

Izbor sprinkler mlaznica urađen je po MEST EN 12845 propisima. Proračunska potrošnja vode po sprinkler mlaznici (**Q_S**):

$$Q_s = k \times \sqrt{H} \quad \text{(l/s)}$$

gde je:
k – koeficijent isticanja mlaznice
N – pritisak ispred mlaznice, (m)

U zavisnosti od raspoloživog pritiska ispred mlaznice, kao i od proračunske potrošnje vode na osnovu inteziteta kvašenja:

$$Q_M = 5x12 = 60 \text{ l/min} = 1 \text{ l/s}$$

$$60 = k \text{ x } \sqrt{0.5} \Rightarrow k = \frac{60}{\sqrt{0.5}} = 84.85 \Rightarrow k = 80$$

Prilikom izbora sprinklera treba uzeti u obzir geometrijske dimenzije prostorije kao i druge građevinske uslove, zatim postojeći pritisak u mreži cjevovoda i potrebnu količinu vode.

Izabrana su mlaznice:
Sprinkler standard viseća mlaznica: K=80, P=12 m^2, T=68°C, R1/2 (DN15), 5 mm ampula (hodnici, kancelarije i opšte prostorije)
Za dio fiskulturne sale se biraju mlaznice sa k faktorom 115, obzirom na visinu tog dijela objekta:
Sprinkler standardna stojeća mlaznica: K=115, P=12 m^2, T=68°C, R1/2 (DN15), 5 mm ampula

4. PAD PRITISKA U INSTALACIJI

$\Delta P = \Delta P_1 + \Delta P_2 + H$

ΔP – ukupan pad pritiska (bar)
ΔP_1 – pad pritiska zbog otpora u cijevima (bar)
ΔP_2 – pad pritiska zbog otpora u armaturi (bar)
H – geodetska visina (bar)

$\Delta P_1 + \Delta P_2$ po HAZEN – WILLIAMS – u:

$\Delta P_{12} = \Delta P_1 + \Delta P_2 = 6.05 \times 10^5 \times C^{-1.85} \times d^{4.87} \times Q^{1.85} \times L$ (bar)
C – konstanta za cijevi (za čelične cijevi C=120), pa je:
$\Delta P_{12} = \Delta P_1 + \Delta P_2 = K \times Q^{1.85} \times L$ (bar)
Q – protok vode (l/min)
L – stvarna + ekvivalentna dužina (m)

5. HIDRAULIČKI PRORAČUN

Hidraulički proračun je dobijen programom EliteSoft "Fire". Princip rada programa je potpuno u skladu sa propisima. Rezultati programa su dati tabelarno. Proračunska zona pokrivanja je dio mreže u fiskulturnoj sali kao hidraulički najzahtjevniji..

FISKULTURNA SALA:

Stvarna potrošnja vode je:
Q = 1570 l/min (26.2 l/s)
Potreban pritisak: p = 5.5 bar (53.4 m)

Zapremina rezervoara je reukovana i iznosi 20 m^3. Rezervoar je gotovi, montažni, ukopan pored objekta uz podstanicu. Prema standardu EN 12845, dozvoljava se mogućnost redukovane zapremine:

EN 12845:2015 (E)

Table 11 — Minimum effective capacity of reduced capacity tanks

Hazard class	Minimum effective capacity m^3
LH – (Wet or pre-action)	5
OH1 – Wet or pre-action	10
OH1 – Dry or alternate OH2 – Wet or pre-action	20
OH2 – Dry or alternate OH3 – Wet or pre-action	30
OH3 – Dry or alternate OH4 – Wet or pre-action	50
HHP and HHS	70[a]

[a] But in no case less than 10 % of the full capacity.

pri čemu treba da se obezbijede i sljedeći uslovi:

- Dotok iz gradske mreže, preko dva nezavisna mehanička ventil plovka, pri čemu svaki pojedinačno može da obezbijedi potreban dotok u slučaju da drugi zakaže; sklop za dopunjavanje je dostupan za pregled; mogućnost provjere protoka.

9.3.4 Reduced capacity tanks

The following conditions shall be met for reduced capacity tanks:

a) the inflow shall be from a town main and shall be automatic, via at least two mechanical float valves. The inflow shall not adversely influence the pump suction. The failure of a single float valve shall not impair the required infill rate;

b) the effective capacity of the tank shall be no less than that shown in Table 11;

c) the tank capacity plus the inflow shall be sufficient to supply the system at full capacity as specified in 9.3.2;

d) it shall be possible to check the capacity of the inflow;

e) the inflow arrangement shall be accessible for inspection.

Za pumpno postrojenje odabira se: **1 KDN 65-250/230 30kW EN 12845 T + 1 KDN 65-250/230 30kW EN 12845 T (1 radna+1 rezervna pumpa)**, proizvođača DAB, Italija.

DAB WATER•TECHNOLOGY

QUOTATION

2025-02-19 Page 2 / 7

DAB PUMPS S.p.A.
Via Marco Polo, 14 - 35035 Mestrino (PD), Italy
Tel. +39 049 5125000 - Fax +39 049 5125950
www.dabpumps.com

Receiver	From
Company Reference Address Phone Fax E-mail	

Pos.no	Item no.	Description	Qty.	UP / EUR	TP / EUR
1		1 KDN EN 12845 COMPACT (Q=1680 H=61.81)			
1.1	60176420	Centrifugal pump: 1 KDN 65-250/230 30kW EN 12845 T COMPACT IE3	1		

1 KDN 65-250/230 30kW EN 12845 T COMPACT IE3

WORK DATA
Liquid : Water
Min. flow rate : 333.3 l/min
Total flow rate : 1680 l/min
Head : 61.81 m
Field of application H(Qmax.) : 41.38 m
Field of application H(Qmin.) : 70.87 m
Field of application Q(max.): 2447 l/min
Field of application Q(min.): 333.3 l/min
Temperature : 20 °C
Operating pressure : 16 bar
Delivery diameter : DN 100
Intake diameter : DN 150
Motor type : 3~400 V/50 Hz

MOTOR
Rated power : 30 kW
Speed : 2950 1/min
Protection rating : IP 55

—UNIT WITH ELECTRIC PUMP—

MECHANICAL STRUCTURE

KDN normalised electric pump on bedplate painted red RAL 3000, pump body and impeller in cast iron (bronze impeller on request).
Coupled by means of flexible spacer coupling to asynchronous three-phase electric motor designed to deliver the max. power absorbed by the KDN pump. Electric pump control panel mounted on KDN pump bedplate.

HYDRAULIC STRUCTURE
Axial suction port. Eccentric diverter adapter (supplied as an accessory).
Max. flow rate of water at pump suction side 1.5 m/s (10.6.2.3)
Radial discharge port, with concentric diverter adapter, 2" connection for priming tank (only installations with suction lift), check valve, circuit with 2 start-up pressure switches, isolator valve (with manual DN125 reduction), discharge manifold painted red RAL 3000.

ELECTRIC PUMP CONTROL PANEL FUNCTIONS
The electric pump control panel, housed in an IP 55 metal enclosure, is equipped with the following components:
Interior of cabinet: main door lock disconnect switch,
fuses (max. current relays - motor protection cutouts are not permitted),
direct starters for pumps up to 7.5 kWatt,
star-delta starters for pumps above 7.5 kWatt,
24V control circuits transformer,
control circuits relay,
terminal board.
On front panel: electric pump control unit,
multifunction instrument with display (voltmeter, ammeter, alarms),
start and stop pushbuttons,
indicator lights,
indicator light with test pushbutton,
AUT - 0 - MAN selector with key removable in AUT position,
lamp test pushbutton.
Includes the following N.O. contacts on the terminal board, to be connected to our remote signals panel:
power/phase presence, pump start request, pump running, failed starting.
The panel is prearranged for installation of a GSM Modem (optional) so that pump

Project	Project ID	Created by	Created on	Last update
	FISKULTURNA SALA CETINJE		2025-02-19	2025-02-19

DAB WATER•TECHNOLOGY

QUOTATION

2025-02-19 Page 3 / 7

DAB PUMPS S.p.A.
Via Marco Polo, 14 - 35035 Mestrino (PD), Italy
Tel. +39 049 5125000 - Fax +39 049 5125250
www.dabpumps.com

Receiver	From
Company Reference Address Phone Fax E-mail	

Pos.no	Item no.	Description	Qty.	UP / EUR	TP / EUR
		unit alarm and/or functional status information can be sent by SMS mobile text messages.			
1.2	-	Product version: 2 electric pumps	1		
		1 KDN 65-250/230 30kW EN 12845 T COMPACT IE3 WORK DATA Liquid : Water Min. flow rate : 333.3 l/min Total flow rate : 1680 l/min Head : 61.81 m Field of application H(Qmax.) : 41.38 m Field of application H(Qmin.) : 70.87 m Field of application Q(max.): 2447 l/min Field of application Q(min.): 333.3 l/min Temperature : 20 °C Operating pressure : 16 bar Delivery diameter : DN 100 Intake diameter : DN 150 Motor type : 3~400 V/50 Hz MOTOR Rated power : 30 kW Speed : 2950 1/min Protection rating : IP 55 ---UNIT WITH ELECTRIC PUMP--- MECHANICAL STRUCTURE KDN normalised electric pump on bedplate painted red RAL 3000, pump body and impeller in cast iron (bronze impeller on request). Coupled by means of flexible spacer coupling to asynchronous three-phase electric motor designed to deliver the max. power absorbed by the KDN pump. Electric pump control panel mounted on KDN pump bedplate. HYDRAULIC STRUCTURE Axial suction port. Eccentric diverter adapter (supplied as an accessory). Max. flow rate of water at pump suction side 1.5 m/s (10.6.2.3) Radial discharge port, with concentric diverter adapter, 2" connection for priming tank (only installations with suction lift), check valve, circuit with 2 start-up pressure switches, isolator valve (with manual DN125 reduction), discharge manifold painted red RAL 3000. ELECTRIC PUMP CONTROL PANEL FUNCTIONS The electric pump control panel, housed in an IP 55 metal enclosure, is equipped with the following components: Interior of cabinet: main door lock disconnect switch, fuses (max. current relays - motor protection cutouts are not permitted), direct starters for pumps up to 7.5 kWatt, star-delta starters for pumps above 7.5 kWatt, 24V control circuits transformer, control circuits relay, terminal board. On front panel: electric pump control unit, multifunction instrument with display (voltmeter, ammeter, alarms), start and stop pushbuttons, indicator lights, indicator light with test pushbutton, AUT - 0 - MAN selector with key removable in AUT position, lamp test pushbutton. Includes the following N.O. contacts on the terminal board, to be connected to our remote signals panel: power/phase presence, pump start request, pump running, failed starting.			

Project	Project ID	Created by	Created on	Last update
	FISKULTURNA SALA CETINJE		2025-02-19	2025-02-19

DAB WATER•TECHNOLOGY

QUOTATION

2025-02-19 Page 4 / 7

DAB PUMPS S.p.A.
Via Marco Polo, 14 - 35035 Mestrino (PD), Italy
Tel. +39 049 5125000 - Fax +39 049 5125250
www.dabpumps.com

Receiver	From
Company Reference Address Phone Fax E-mail	

Pos.nc	Item no.	Description	Qty.	UP / EUR	TP / EUR
		The panel is prearranged for installation of a GSM Modem (optional) so that pump unit alarm and/or functional status information can be sent by SMS mobile text messages.			
1.3	60176420	Accessories: 1 KDN 65-250/230 30kW EN 12845 T COMPACT	1		
1.4	60200986	Accessories: Coupling KIT 2KDN 65 EN COMPACT - 2KVT (DN100)	1		
		Coupling KIT 2KDN 65 EN COMPACT - 2KVT (DN100) Only in the case of units comprising two modules (electric pump and/or Diesel pump) 1 coupling KIT is required. Components painted red RAL 3000.			
1.5	60124056	Accessories: SUCTION KIT KDN 65 - KDN 50-330 EN (DN150)	2		
		SUCTION KIT KDN 65 - KDN 50-330 EN (DN150) The kit is composed of an eccentric cone with screws, nuts and seals. It maintains the water speed in suction below 1.5 m/s and prevents the formation of air pockets. 1 SUCTION KIT is required for each pump set.			
1.6	002789107	Accessories: Flowmeter T 100 DN 100 (25-200 m³/h)	1		
1.7	002132662	Accessories: Butterfly valve DN 150	2		
		Butterfly valve DN 150 These are required to allow pump maintenance to be carried out in the case of flooded suction type installations. 1 BUTTERFLY VALVE is required for each 1 KDN set (electric or Diesel). 1 VALVE for units 1NKV and 2 VALVES for units 2NKV.			

Project	Project ID	Created by	Created on	Last update
	FISKULTURNA SALA CETINJE		2025-02-19	2025-02-19

DAB WATER•TECHNOLOGY

DATA SHEET

2025-02-19 Page 5 / 7

DAB PUMPS S.p.A.
Via Marco Polo, 14 - 35035 Mestrino (PD), Italy
Tel. +39 049 5125000 - Fax +39 049 5125950
www.dabpumps.com

Receiver	From
Company	
Reference	
Address	
Phone	
Fax	
E-mail	

Item n° : 60178420 **Customer pos. no.:**

Model :

1 KDN 65-250/230 30kW EN 12845 T COMPACT IE3

2 electric pumps

Pump data

MEI ≥ 0,50

Pressure rating :	PN16
Min. fluid temperature :	0 °C
Max. fluid temperature :	40 °C
Max. Ambient temperature :	40 °C

Requested data

Flow:	1570.00 l/min
Head:	54.00 m
Fluid:	Water
Fluid Temperature:	20 °C
Density:	998.3 kg/m³
Kinematic viscosity:	1.005 mm²/s
Vapor pressure:	2.34 kPa

Hydraulic data (duty point)

Flow:	1679.7 l/min
Head:	61.812 m

Motor data main pump:

Nominal power P2 :	30 kW
Rated speed :	2950 1/min
Rated voltage :	400 V
Rated current (subject to change) :	52 A

Motor data jockey pump:

Nominal power P2 :	kW
Rated voltage :	
Rated current (subject to change) :	

Materials

Pump body	Cast iron 250 UNI ISO 185
Impeller	Cast iron 250 UNI ISO 185
Pump shaft	AISI 420 - UNI 6900/71
Mechanical seal	Carbon/Silicon carbide
O-Ring	Ethylene propylene (EPDM)
Seal disk	Cast iron 250 UNI ISO 185
Seal spacer	AISI 304 - UNI 6900/71
Baseplate	Painted steel red RAL 3000

Curve tolerance according to ISO 9906

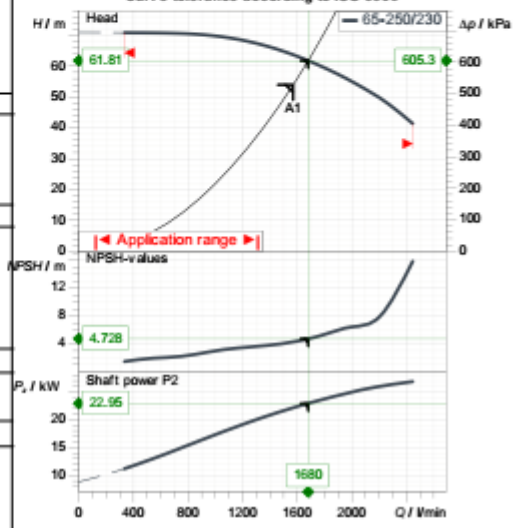

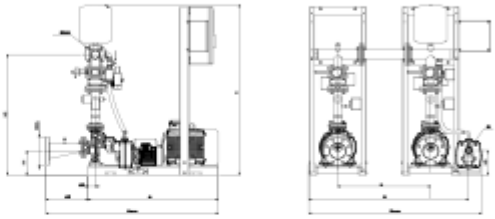

Dimensions in mm

A	1400	H2	1408		
A max	1860				
A1	391				
A2	90				
DNA	150				
DNM	100				
H	1867				
H1	260				

Weight : 1440 kg

Hydraulic connection

Suction side (Suction Kit) DNA :	DN 150 / PN16
Discharge side (Discharge manifold) DNM :	DN 100 / PN 16

The Jockeypump (if present) is always fitted to the skid of the service pump.

DAB PUMPS reserves the right to make modifications without notice

DAB WATER•TECHNOLOGY

PERFORMANCE CURVES

2025-02-19 Page 6 / 7

DAB PUMPS S.p.A.
Via Marco Polo, 14 - 35035 Mestrino (PD), Italy
Tel. +39 049 5125000 - Fax +39 049 5125950
www.dabpumps.com

Receiver	From
Company Reference Address Phone Fax E-mail	

1 KDN 65-250/230 30kW EN 12845 T COMPACT IE3

Curve tolerance according to ISO 9906

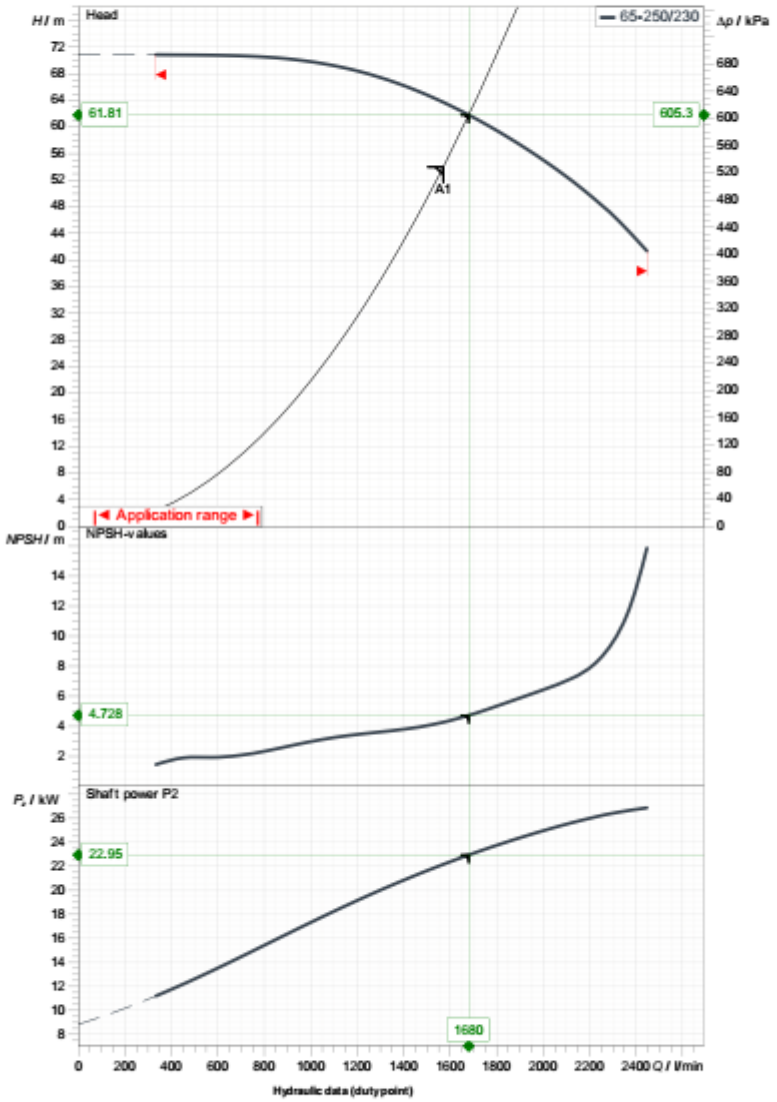

Suction side:	Discharge side:	Flow:	Head:	Rated speed:
DN 150 PN16	DN 100 PN 16	1570 l/min	54 m	2950 1/min

MAIN_PROJECT_TITLE	BUSINESS_PROCESS_ID	OWNER_	ISSUE_DATE
	FISKULTURNA SALA CETINJE		2025-02-19

DAB PUMPS reserves the right to make modifications without notice

DAB WATER•TECHNOLOGY

DIMENSIONAL DRAWING

2025-02-19 Page 7 / 7

DAB PUMPS S.p.A.
Via Marco Polo, 14 - 35035 Mestrino (PD), Italy
Tel. +39 049 5125000 - Fax +39 049 5125950
www.dabpumps.com

Receiver	From
Company Reference Address Phone Fax E-mail	

1 KDN 65-250/230 30kW EN 12845 T COMPACT IE3

2 electric pumps

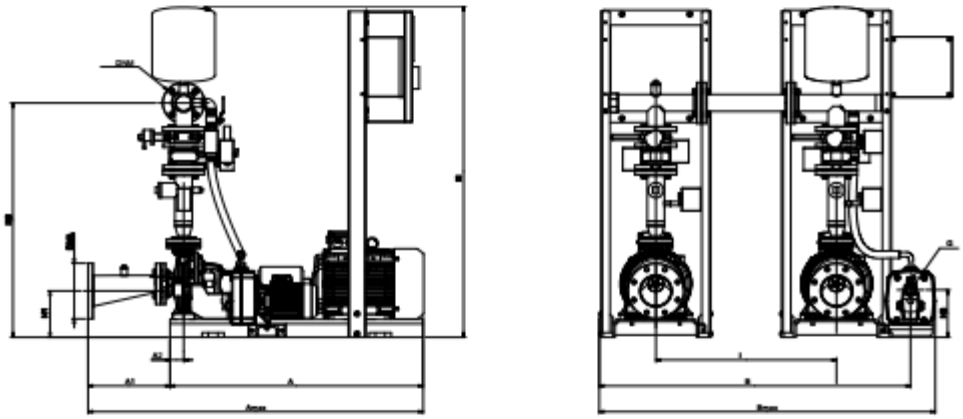

The Jockey pump (if present) is always fitted to the skid of the service pump.

Dimensions in mm		
1	A	1400
2	A max	1850
3	A1	391
4	A2	90
5	DNA	150
6	DNM	100
7	H	1857
8	H1	260
9	H2	1408
10		
11		

Hydraulic connection

Suction side (Suction Kit) DNA :
DN 150
PN16

Discharge side (Discharge manifold) DNM :
DN 100
PN 16

MAIN_PROJECT_TITLE	BUSINESS_PROCESS_ID	OWNER_	ISSUE_DATE
	FISKULTURNA SALA CETINJE		2025-02-19

DAB PUMPS reserves the right to make modifications without notice

Odgovorni inženjer
Vuk Kasalica, dipl. ing. maš.

6. IZVJEŠTAJ HIDRAULIČKOG PRORAČUNA

FISKULTURNA SALA CETINJE
Fire Sprinkler Reports

for

Prepared By:

2/18/2025

General Project Data Report

General Data

Project Title:	FISKULTURNA SALA CETINJE	Project File Name:	URBI SALA CETINJE..fiw
Designed By:		Date:	2/18/2025
Code Reference:		Approving Agency:	
Client Name:		Phone:	
Address:		City, State Zip Code:	
Company Name:		Representative:	
Company Address:		City And State:	
Phone:			
Building Name:		Building Owner:	
Contact at Building:		Phone at Building:	
Address Of Building:		City, State Zip Code:	

Project Data

Description Of Hazard:	OH1		Sprinkler System Type:	Dry	
Design Area Of Water Application:	90	m²	Maximum Area Per Sprinkler:	12	m²
Default Sprinkler K-Factor:	115.00	Km	Default Pipe Material:	SCHED 40 WET STEEL	
Inside Hose Stream Allowance:	0.00	Lpm	Outside Hose Stream Allowance:	0.00	Lpm
In Rack Sprinkler Allowance:	0.00	Lpm			

Sprinkler Specifications

Make:	VIKING		Model:	MX3	
Size:	DN15		Temperature Rating:	67.79	C

Water Supply Test Data

Source Of Information:					
Test Hydrant ID:			Date Of Test:		
Hydrant Elevation:	0	m	Static Pressure:	0.00	kPa
Test Flow Rate:	0.00	Lpm	Test Residual Pressure:	0.00	kPa
Calculated System Flow Rate:	1569.06	Lpm	Calculated Inflow Residual Pressure:	545.94	kPa

Calculation Project Data

Calculation Mode:	Demand				
HMD Minimum Residual Pressure:	56.00	kPa	Minimum Desired Flow Density:	5.00	Lpm/m²
Number Of Active Nodes:	36				
Number Of Active Pipes:	36		Number Of Inactive Pipes:	0	
Number Of Active Sprinklers:	12		Number Of Inactive Sprinklers:	0	

FIRE - Fire Sprinkler Hydraulics Calculation Program
pReJkEr
Hell

Elite Software Development, Inc.
FISKULTURNA SALA CETINJE
Page 3

Fire Sprinkler Input Data

Node Input Data

Node No.	Node Description Branch Description	Area Group Branch Dia. (cm)	Sprinkler KFactor (Km) Branch Len. (m)	Pressure Estimate (kPa) Branch Stnd Fittings	Node Elev (m) Branch Non-Stnd Fittings (m)	Non-Sprinkler Flow (Lpm) Branch Sprk KFactor (Km)
1	Sprinkler ----	---- 0.000	115.00 0.0	56.00 ----	14.80 0.0	0.00 0.00
2	Sprinkler ----	---- 0.000	115.00 0.0	70.26 ----	14.10 0.0	0.00 0.00
3	Sprinkler ----	---- 0.000	115.00 0.0	121.47 ----	13.40 0.0	0.00 0.00
4	Sprinkler ----	---- 0.000	115.00 0.0	159.18 ----	12.70 0.0	0.00 0.00
5	Sprinkler ----	---- 0.000	115.00 0.0	195.75 ----	12.00 0.0	0.00 0.00
6	Sprinkler ----	---- 0.000	115.00 0.0	217.72 ----	11.30 0.0	0.00 0.00
7	Sprinkler ----	---- 0.000	115.00 0.0	56.00 ----	14.80 0.0	0.00 0.00
8	Sprinkler ----	---- 0.000	115.00 0.0	70.27 ----	14.10 0.0	0.00 0.00
9	Sprinkler ----	---- 0.000	115.00 0.0	121.47 ----	13.40 0.0	0.00 0.00
10	Sprinkler ----	---- 0.000	115.00 0.0	159.18 ----	12.70 0.0	0.00 0.00
11	Sprinkler ----	---- 0.000	115.00 0.0	195.75 ----	12.00 0.0	0.00 0.00
12	Sprinkler ----	---- 0.000	115.00 0.0	217.73 ----	11.30 0.0	0.00 0.00
13	No Discharge ----	---- 0.000	N/A 0.0	246.85 ----	10.90 0.0	0.00 0.00
14	No Discharge ----	---- 0.000	N/A 0.0	222.51 ----	11.60 0.0	0.00 0.00
15	No Discharge ----	---- 0.000	N/A 0.0	181.96 ----	12.30 0.0	0.00 0.00
16	No Discharge ----	---- 0.000	N/A 0.0	140.08 ----	13.00 0.0	0.00 0.00

C:\Program Files (x86)\Elite\Firew\PROJECTS\URBI SALA CETINJE..fiw Tuesday, February 18, 2025, 11:54 PM

FIRE - Fire Sprinkler Hydraulics Calculation Program
pReJkEr
Hell

Elite Software Development, Inc.
FISKULTURNA SALA CETINJE
Page 4

Fire Sprinkler Input Data

Node Input Data (cont'd)

Node No.	Node Description Branch Description	Area Group Branch Dia. (cm)	Sprinkler KFactor (Km) Branch Len. (m)	Pressure Estimate (kPa) Branch Stnd Fittings	Node Elev (m) Branch Non-Stnd Fittings (m)	Non-Sprinkler Flow (Lpm) Branch Sprk KFactor (Km)
17	No Discharge ----	---- 0.000	N/A 0.0	83.04 ----	13.70 0.0	0.00 0.00
18	No Discharge ----	---- 0.000	N/A 0.0	63.69 ----	14.40 0.0	0.00 0.00
19	No Discharge ----	---- 0.000	N/A 0.0	246.84 ----	10.90 0.0	0.00 0.00
20	No Discharge ----	---- 0.000	N/A 0.0	222.50 ----	11.60 0.0	0.00 0.00
21	No Discharge ----	---- 0.000	N/A 0.0	181.96 ----	12.30 0.0	0.00 0.00
22	No Discharge ----	---- 0.000	N/A 0.0	140.07 ----	13.00 0.0	0.00 0.00
23	No Discharge ----	---- 0.000	N/A 0.0	83.03 ----	13.70 0.0	0.00 0.00
24	No Discharge ----	---- 0.000	N/A 0.0	63.68 ----	14.40 0.0	0.00 0.00
25	No Discharge ----	---- 0.000	N/A 0.0	309.68 ----	9.30 0.0	0.00 0.00
26	No Discharge ----	---- 0.000	N/A 0.0	309.67 ----	9.30 0.0	0.00 0.00
27	No Discharge ----	---- 0.000	N/A 0.0	331.75 ----	9.30 0.0	0.00 0.00
28	No Discharge ----	---- 0.000	N/A 0.0	341.01 ----	9.30 0.0	0.00 0.00
29	No Discharge ----	---- 0.000	N/A 0.0	382.81 ----	5.80 0.0	0.00 0.00
30	No Discharge ----	---- 0.000	N/A 0.0	405.09 ----	5.80 0.0	0.00 0.00
31	No Discharge ----	---- 0.000	N/A 0.0	444.71 ----	2.50 0.0	0.00 0.00
32	No Discharge ----	---- 0.000	N/A 0.0	480.59 ----	2.50 0.0	0.00 0.00
33	No Discharge ----	---- 0.000	N/A 0.0	519.04 ----	0.00 0.0	0.00 0.00

C:\Program Files (x86)\Elite\Firew\PROJECTS\URBI SALA CETINJE..fiw Tuesday, February 18, 2025, 11:54 PM

FIRE - Fire Sprinkler Hydraulics Calculation Program
pReJkEr
Hell

Elite Software Development, Inc.
FISKULTURNA SALA CETINJE
Page 5

Fire Sprinkler Input Data

Node Input Data (cont'd)

Node No.	Node Description Branch Description	Area Group Branch Dia. (cm)	Sprinkler KFactor (Km) Branch Len. (m)	Pressure Estimate (kPa) Branch Stnd Fittings	Node Elev (m) Branch Non-Stnd Fittings (m)	Non-Sprinkler Flow (Lpm) Branch Sprk KFactor (Km)
34	No Discharge ----	---- 0.000	N/A 0.0	545.94 ----	0.00 0.0	0.00 0.00
35	No Discharge ----	---- 0.000	N/A 0.0	257.73 ----	10.80 0.0	0.00 0.00
36	No Discharge ----	---- 0.000	N/A 0.0	257.73 ----	10.80 0.0	0.00 0.00

C:\Program Files (x86)\Elite\Firew\PROJECTS\URBI SALA CETINJE..fiw Tuesday, February 18, 2025, 11:54 PM

FIRE - Fire Sprinkler Hydraulics Calculation Program
pReJkEr
Hell

Elite Software Development, Inc.
FISKULTURNA SALA CETINJE
Page 6

Fire Sprinkler Input Data

Pipe Input Data

Beg. Node	End. Node	Pipe Description	Nominal Diameter (mm)	Type Group	Fitting Data	Nominal Length (m)	Fitting Length (m)	Total Length (m)	CFactor (gpm/inch-psi)
34	33	SCHED 40 WET STEEL	101.600	0	TGC	2.00	21.41	23.41	120
33	32	SCHED 40 WET STEEL	101.600	0	EG	2.50	9.66	12.16	120
32	31	SCHED 40 WET STEEL	101.600	0	5E	16.00	15.24	31.24	120
31	30	SCHED 40 WET STEEL	101.600	0	E	3.30	3.05	6.35	120
30	29	SCHED 40 WET STEEL	101.600	0	2E	13.30	6.10	19.40	120
29	28	SCHED 40 WET STEEL	101.600	0	E	3.50	3.05	6.55	120
28	27	SCHED 40 WET STEEL	101.600	0	EG	4.40	3.66	8.06	120
27	26	SCHED 40 WET STEEL	101.600	0	2ET	68.50	12.19	80.69	120
27	25	SCHED 40 WET STEEL	101.600	0	2ET	48.00	12.19	60.19	120
26	25	SCHED 40 WET STEEL	101.600	0		3.25	0.00	3.25	120
26	36	SCHED 40 WET STEEL	50.800	0	T	1.50	3.05	4.55	120
25	35	SCHED 40 WET STEEL	50.800	0	T	1.50	3.05	4.55	120
36	19	SCHED 40 WET STEEL	50.800	0	F	0.60	0.61	1.21	120
35	13	SCHED 40 WET STEEL	50.800	0	F	0.60	0.61	1.21	120
19	20	SCHED 40 WET STEEL	50.800	0		3.35	0.00	3.35	120
13	14	SCHED 40 WET STEEL	50.800	0		3.35	0.00	3.35	120
20	21	SCHED 40 WET STEEL	38.100	0		3.35	0.00	3.35	120
14	15	SCHED 40 WET STEEL	38.100	0		3.35	0.00	3.35	120
21	22	SCHED 40 WET STEEL	31.750	0		3.35	0.00	3.35	120
15	16	SCHED 40 WET STEEL	31.750	0		3.35	0.00	3.35	120
22	23	SCHED 40 WET STEEL	25.400	0		3.35	0.00	3.35	120
16	17	SCHED 40 WET STEEL	25.400	0		3.35	0.00	3.35	120
23	24	SCHED 40 WET STEEL	25.400	0		3.35	0.00	3.35	120
17	18	SCHED 40 WET STEEL	25.400	0		3.35	0.00	3.35	120
24	1	SCHED 40 WET STEEL	25.400	0	E	0.40	0.61	1.01	120
23	2	SCHED 40 WET STEEL	25.400	0	T	0.40	1.52	1.92	120

C:\Program Files (x86)\Elite\Firew\PROJECTS\URBI SALA CETINJE..fiw Tuesday, February 18, 2025, 11:54 PM

FIRE - Fire Sprinkler Hydraulics Calculation Program
pReJkEr
Hell

Elite Software Development, Inc.
FISKULTURNA SALA CETINJE
Page 7

Fire Sprinkler Input Data

Pipe Input Data (cont'd)

Beg. Node	End. Node	Pipe Description	Nominal Diameter (mm)	Type Group	Fitting Data	Nominal Length (m)	Fitting Length (m)	Total Length (m)	CFactor (gpm/inch-psi)
22	3	SCHED 40 WET STEEL	25.400	0	T	0.40	1.52	1.92	120
21	4	SCHED 40 WET STEEL	25.400	0	T	0.40	1.52	1.92	120
20	5	SCHED 40 WET STEEL	25.400	0	T	0.40	1.52	1.92	120
19	6	SCHED 40 WET STEEL	25.400	0	T	0.40	1.52	1.92	120
18	7	SCHED 40 WET STEEL	25.400	0	E	0.40	0.61	1.01	120
17	8	SCHED 40 WET STEEL	25.400	0	T	0.40	1.52	1.92	120
16	9	SCHED 40 WET STEEL	25.400	0	T	0.40	1.52	1.92	120
15	10	SCHED 40 WET STEEL	25.400	0	T	0.40	1.52	1.92	120
14	11	SCHED 40 WET STEEL	25.400	0	T	0.40	1.52	1.92	120
13	12	SCHED 40 WET STEEL	25.400	0	T	0.40	1.52	1.92	120

C:\Program Files (x86)\Elite\Firew\PROJECTS\URBI SALA CETINJE..fiw Tuesday, February 18, 2025, 11:54 PM

FIRE - Fire Sprinkler Hydraulics Calculation Program
pReJkEr
Hell

Elite Software Development, Inc.
FISKULTURNA SALA CETINJE
Page 8

Fire Sprinkler Output Data

Overall Node Groupings Output Data

Pipe Segment Beg. Node	Pipe Segment End. Node	Pipe Type Group	Pipe Flow Rate (Lpm)	Sprinkler Flow At Beg. Node (Lpm)	Non-Sprinkler Flow Out (+) (Lpm)	Non-Sprinkler Flow In (-) (Lpm)	Beg. Node Residual Pressure (kPa)	Imbalance Flow At Beg. Node (Lpm)
1	24	0	-86.02	86.02	0.00	0.00	56.00	
2	23	0	-96.36	96.36	0.00	0.00	70.26	0.00092
3	22	0	-126.69	126.69	0.00	0.00	121.47	0.00217
4	21	0	-145.02	145.03	0.00	0.00	159.18	0.00325
5	20	0	-160.82	160.83	0.00	0.00	195.75	0.00531
6	19	0	-169.61	169.61	0.00	0.00	217.72	0.00652
7	18	0	-86.02	86.02	0.00	0.00	56.00	0.00204
8	17	0	-96.35	96.36	0.00	0.00	70.27	0.00441
9	16	0	-126.69	126.69	0.00	0.00	121.47	0.00473
10	15	0	-145.03	145.03	0.00	0.00	159.18	0.00383
11	14	0	-160.82	160.83	0.00	0.00	195.75	0.00551
12	13	0	-169.61	169.62	0.00	0.00	217.73	0.00665
13	12	0	169.61	0.00	0.00	0.00	246.85	0.00055
13	35	0	-784.53					
13	14	0	614.92					
14	11	0	160.82	0.00	0.00	0.00	222.51	-0.00066
14	13	0	-614.92					
14	15	0	454.10					
15	10	0	145.03	0.00	0.00	0.00	181.96	0.00072
15	14	0	-454.10					
15	16	0	309.07					
16	9	0	126.69	0.00	0.00	0.00	140.08	-0.00607
16	15	0	-309.07					
16	17	0	182.38					
17	8	0	96.35	0.00	0.00	0.00	83.04	-0.00609
17	16	0	-182.38					
17	18	0	86.02					
18	7	0	86.02	0.00	0.00	0.00	63.69	-0.00009
18	17	0	-86.02					
19	6	0	169.61	0.00	0.00	0.00	246.84	0.00057
19	36	0	-784.52					
19	20	0	614.91					

C:\Program Files (x86)\Elite\Firew\PROJECTS\URBI SALA CETINJE..fiw Tuesday, February 18, 2025, 11:54 PM

FIRE - Fire Sprinkler Hydraulics Calculation Program
pReJkEr
Hell

Elite Software Development, Inc.
FISKULTURNA SALA CETINJE
Page 9

Fire Sprinkler Output Data

Overall Node Groupings Output Data (cont'd)

Pipe Segment Beg. Node	Pipe Segment End. Node	Pipe Type Group	Pipe Flow Rate (Lpm)	Sprinkler Flow At Beg. Node (Lpm)	Non-Sprinkler Flow Out (+) (Lpm)	Non-Sprinkler Flow In (-) (Lpm)	Beg. Node Residual Pressure (kPa)	Imbalance Flow At Beg. Node (Lpm)
~~20~~	~~5~~	~~0~~	~~160.82~~	~~0.00~~	~~0.00~~	~~0.00~~	~~222.50~~	~~0.00063~~
20	19	0	-614.91					
20	21	0	454.09					
21	4	0	145.02	0.00	0.00	0.00	181.96	-0.00040
21	20	0	-454.09					
21	22	0	309.07					
22	3	0	126.69	0.00	0.00	0.00	140.07	-0.00134
22	21	0	-309.07					
22	23	0	182.38					
23	2	0	96.36	0.00	0.00	0.00	83.03	-0.00111
23	22	0	-182.38					
23	24	0	86.02					
24	1	0	86.02	0.00	0.00	0.00	63.68	0.00066
24	23	0	-86.02					
25	27	0	-846.45	0.00	0.00	0.00	309.68	-0.00146
25	26	0	61.92					
25	35	0	784.53					
26	25	0	-61.92	0.00	0.00	0.00	309.67	0.00039
26	27	0	-722.60					
26	36	0	784.52					
27	25	0	846.45	0.00	0.00	0.00	331.75	-0.00032
27	26	0	722.60					
27	28	0	-1569.06					
28	27	0	1569.06	0.00	0.00	0.00	341.01	-0.00009
28	29	0	-1569.06					
29	28	0	1569.06	0.00	0.00	0.00	382.81	0.00037
29	30	0	-1569.05					
30	29	0	1569.05	0.00	0.00	0.00	405.09	-0.00040
30	31	0	-1569.06					
31	30	0	1569.06	0.00	0.00	0.00	444.71	0.00055
31	32	0	-1569.05					
32	31	0	1569.05	0.00	0.00	0.00	480.59	-0.00034
32	33	0	-1569.06					
33	32	0	1569.06	0.00	0.00	0.00	519.04	0.00022
33	34	0	-1569.05					
34	33	0	1569.05	0.00	0.00	-1569.05496204397	545.94	

C:\Program Files (x86)\Elite\Firew\PROJECTS\URBI SALA CETINJE..fiw Tuesday, February 18, 2025, 11:54 PM

FIRE - Fire Sprinkler Hydraulics Calculation Program
pReJkEr
Hell

Elite Software Development, Inc.
FISKULTURNA SALA CETINJE
Page 10

Fire Sprinkler Output Data

Overall Node Groupings Output Data (cont'd)

Pipe Segment		Pipe	Pipe	Sprinkler Flow	Non-Sprinkler Flow		Beg. Node	Imbalance
Beg. Node	End. Node	Type Group	Flow Rate (Lpm)	At Beg. Node (Lpm)	Out (+) (Lpm)	In (-) (Lpm)	Residual Pressure (kPa)	Flow At Beg. Node (Lpm)
35	13	0	784.53	0.00	0.00	0.00	257.73	0.00013
35	25	0	-784.53					
36	19	0	784.52	0.00	0.00	0.00	257.73	0.00023
36	26	0	-784.52					

C:\Program Files (x86)\Elite\Firew\PROJECTS\URBI SALA CETINJE..fiw Tuesday, February 18, 2025, 11:54 PM

FIRE - Fire Sprinkler Hydraulics Calculation Program
pReJkEr
Hell

Elite Software Development, Inc.
FISKULTURNA SALA CETINJE
Page 11

Fire Sprinkler Output Data

Overall Pipe Output Data

Beg. End. Node	Nodal KFactor (Km)	Elevation (m)	Spk/Hose Discharge (Lpm)	Residual Pressure (kPa)	Nom. Dia. Inside Dia. C-Value	q (Lpm) Q (Lpm) Velocity (m/s)	F. L./m (kPa/m) Fittings Type-Grp	Pipe-Len. Fit-Len. Tot-Len. (m)	PF-(kPa) PE-(kPa) PT-(kPa)
13	0.00	10.90	0.00	246.83	25.40	169.62	13.09796	0.40	25.199
12	114.94	11.30	169.62	217.74	26.670	169.62	T	1.52	3.918
	SCHED 40 WET STEEL				120	5.07	0	1.92	29.117
13	0.00	10.90	0.00	246.83	50.80	0.00	5.21894	3.35	17.484
14	0.00	11.60	0.00	222.49	52.578	614.93	-----	0.00	6.856
	SCHED 40 WET STEEL				120	4.73	0	3.35	24.340
14	0.00	11.60	0.00	222.49	25.40	160.83	11.87020	0.40	22.837
11	114.94	12.00	160.84	195.74	26.670	160.84	T	1.52	3.918
	SCHED 40 WET STEEL				120	4.81	0	1.92	26.755
14	0.00	11.60	0.00	222.49	38.10	0.00	10.05636	3.35	33.689
15	0.00	12.30	0.00	181.95	40.894	454.09	-----	0.00	6.856
	SCHED 40 WET STEEL				120	5.76	0	3.35	40.546
15	0.00	12.30	0.00	181.95	25.40	145.03	9.80354	0.40	18.861
10	114.94	12.70	145.02	159.20	26.670	145.02	T	1.52	3.918
	SCHED 40 WET STEEL				120	4.33	0	1.92	22.779
15	0.00	12.30	0.00	181.95	31.75	0.00	10.45527	3.35	35.026
16	0.00	13.00	0.00	140.10	35.052	309.07	-----	0.00	6.856
	SCHED 40 WET STEEL				120	5.34	0	3.35	41.882
16	0.00	13.00	0.00	140.10	25.40	126.69	7.63414	0.40	14.687
9	114.94	13.40	126.70	121.49	26.670	126.70	T	1.52	3.918
	SCHED 40 WET STEEL				120	3.79	0	1.92	18.605
16	0.00	13.00	0.00	140.10	25.40	0.00	14.98065	3.35	50.186
17	0.00	13.70	0.00	83.01	26.670	182.38	-----	0.00	6.856
	SCHED 40 WET STEEL				120	5.45	0	3.35	57.042
17	0.00	13.70	0.00	83.01	25.40	96.36	4.60085	0.40	8.852
8	114.94	14.10	96.37	70.26	26.670	96.34	T	1.52	3.918
	SCHED 40 WET STEEL				120	2.88	0	1.92	12.769
17	0.00	13.70	0.00	83.01	25.40	0.00	3.72985	3.35	12.495
18	0.00	14.40	0.00	63.71	26.670	86.00	-----	0.00	6.856
	SCHED 40 WET STEEL				120	2.57	0	3.35	19.352
18	0.00	14.40	0.00	63.71	25.40	86.02	3.72985	0.40	3.765
7	114.94	14.80	86.04	55.99	26.670	86.00	E	0.61	3.918
	SCHED 40 WET STEEL				120	2.57	0	1.01	7.683
19	0.00	10.90	0.00	246.83	25.40	169.61	13.09758	0.40	25.198
6	114.94	11.30	169.62	217.74	26.670	169.62	T	1.52	3.918
	SCHED 40 WET STEEL				120	5.07	0	1.92	29.116

C:\Program Files (x86)\Elite\Firew\PROJECTS\URBI SALA CETINJE..fiw Tuesday, February 18, 2025, 11:54 PM

FIRE - Fire Sprinkler Hydraulics Calculation Program
pReJkEr
Hell

Elite Software Development, Inc.
FISKULTURNA SALA CETINJE
Page 12

Fire Sprinkler Output Data

Overall Pipe Output Data (cont'd)

Beg. End. Node	Nodal KFactor (Km)	Elevation (m)	Spk/Hose Discharge (Lpm)	Residual Pressure (kPa)	Nom. Dia. Inside Dia. C-Value	q (Lpm) Q (Lpm) Velocity (m/s)	F. L./m (kPa/m) Fittings Type-Grp	Pipe-Len. Fit-Len. Tot-Len. (m)	PF-(kPa) PE-(kPa) PT-(kPa)
19	0.00	10.90	0.00	246.83	50.80	0.00	5.21876	3.35	17.483
20	0.00	11.60	0.00	222.49	52.578	614.93	-----	0.00	6.856
	SCHED 40 WET STEEL				120	4.73	0	3.35	24.339
20	0.00	11.60	0.00	222.49	25.40	160.83	11.86986	0.40	22.836
5	114.94	12.00	160.84	195.74	26.670	160.84	T	1.52	3.918
	SCHED 40 WET STEEL				120	4.81	0	1.92	26.754
20	0.00	11.60	0.00	222.49	38.10	0.00	10.05599	3.35	33.688
21	0.00	12.30	0.00	181.95	40.894	454.09	-----	0.00	6.856
	SCHED 40 WET STEEL				120	5.76	0	3.35	40.544
21	0.00	12.30	0.00	181.95	25.40	145.03	9.80330	0.40	18.861
4	114.94	12.70	145.02	159.20	26.670	145.02	T	1.52	3.918
	SCHED 40 WET STEEL				120	4.33	0	1.92	22.778
21	0.00	12.30	0.00	181.95	31.75	0.00	10.45476	3.35	35.024
22	0.00	13.00	0.00	140.10	35.052	309.07	-----	0.00	6.856
	SCHED 40 WET STEEL				120	5.34	0	3.35	41.880
22	0.00	13.00	0.00	140.10	25.40	126.69	7.63417	0.40	14.687
3	114.94	13.40	126.70	121.49	26.670	126.70	T	1.52	3.918
	SCHED 40 WET STEEL				120	3.79	0	1.92	18.605
22	0.00	13.00	0.00	140.10	25.40	0.00	14.98008	3.35	50.184
23	0.00	13.70	0.00	83.01	26.670	182.38	-----	0.00	6.856
	SCHED 40 WET STEEL				120	5.45	0	3.35	57.040
23	0.00	13.70	0.00	83.01	25.40	96.36	4.60099	0.40	8.852
2	114.94	14.10	96.37	70.26	26.670	96.34	T	1.52	3.918
	SCHED 40 WET STEEL				120	2.88	0	1.92	12.770
23	0.00	13.70	0.00	83.01	25.40	0.00	3.72982	3.35	12.495
24	0.00	14.40	0.00	63.71	26.670	86.00	-----	0.00	6.856
	SCHED 40 WET STEEL				120	2.57	0	3.35	19.351
24	0.00	14.40	0.00	63.71	25.40	86.02	3.72988	0.40	3.765
1	114.94	14.80	86.00	55.99	26.670	86.00	E	0.61	3.918
	SCHED 40 WET STEEL				120	2.57	0	1.01	7.683
26	0.00	9.30	0.00	309.64	101.60	61.92	0.00290	3.25	0.009
25	0.00	9.30	0.00	309.64	102.362	61.93	-----	0.00	0.000
	SCHED 40 WET STEEL				120	0.12	0	3.25	0.009
25	0.00	9.30	0.00	309.64	50.80	0.00	8.19049	1.50	37.250
35	0.00	10.80	0.00	257.73	52.578	784.55	T	3.05	14.692
	SCHED 40 WET STEEL				120	6.04	0	4.55	51.942

C:\Program Files (x86)\Elite\Firew\PROJECTS\URBI SALA CETINJE..fiw Tuesday, February 18, 2025, 11:54 PM

FIRE - Fire Sprinkler Hydraulics Calculation Program
pReJkEr
Hell

Elite Software Development, Inc.
FISKULTURNA SALA CETINJE
Page 13

Fire Sprinkler Output Data

Overall Pipe Output Data (cont'd)

Beg. End. Node	Nodal KFactor (Km)	Elevation (m)	Spk/Hose Discharge (Lpm)	Residual Pressure (kPa)	Nom. Dia. Inside Dia. C-Value	q (Lpm) Q (Lpm) Velocity (m/s)	F. L./m (kPa/m) Fittings Type-Grp	Pipe-Len. Fit-Len. Tot-Len. (m)	PF-(kPa) PE-(kPa) PT-(kPa)
26	0.00	9.30	0.00	309.64	50.80	0.00	8.19021	1.50	37.248
36	0.00	10.80	0.00	257.73	52.578	784.51	T	3.05	14.692
	SCHED 40 WET STEEL				120	6.04	0	4.55	51.941
27	0.00	9.30	0.00	331.78	101.60	0.00	0.36671	48.00	22.073
25	0.00	9.30	0.00	309.64	102.362	846.44	2ET	12.19	0.000
	SCHED 40 WET STEEL				120	1.72	0	60.19	22.073
27	0.00	9.30	0.00	331.78	101.60	722.60	0.27366	68.50	22.082
26	0.00	9.30	0.00	309.64	102.362	722.62	2ET	12.19	0.000
	SCHED 40 WET STEEL				120	1.47	0	80.69	22.082
28	0.00	9.30	0.00	341.01	101.60	0.00	1.14874	4.40	9.256
27	0.00	9.30	0.00	331.78	102.362	1569.06	EG	3.66	0.000
	SCHED 40 WET STEEL				120	3.19	0	8.06	9.256
29	0.00	5.80	0.00	382.80	101.60	0.00	1.14874	3.50	7.522
28	0.00	9.30	0.00	341.01	102.362	1569.06	E	3.05	34.282
	SCHED 40 WET STEEL				120	3.19	0	6.55	41.804
30	0.00	5.80	0.00	405.07	101.60	0.00	1.14874	13.30	22.281
29	0.00	5.80	0.00	382.80	102.362	1569.06	2E	6.10	0.000
	SCHED 40 WET STEEL				120	3.19	0	19.39	22.281
31	0.00	2.50	0.00	444.71	101.60	0.00	1.14874	3.30	7.292
30	0.00	5.80	0.00	405.07	102.362	1569.06	E	3.05	32.323
	SCHED 40 WET STEEL				120	3.19	0	6.35	39.615
32	0.00	2.50	0.00	480.56	101.60	0.00	1.14874	16.00	35.887
31	0.00	2.50	0.00	444.71	102.362	1569.06	5E	15.24	0.000
	SCHED 40 WET STEEL				120	3.19	0	31.24	35.887
33	0.00	0.00	0.00	519.04	101.60	0.00	1.14874	2.50	13.966
32	0.00	2.50	0.00	480.56	102.362	1569.06	EG	9.66	24.487
	SCHED 40 WET STEEL				120	3.19	0	12.16	38.453
34	0.00	0.00	0.00	545.93	101.60	0.00	1.14874	2.00	26.893
33	0.00	0.00	0.00	519.04	102.362	1569.06	TGC	21.41	0.000
	SCHED 40 WET STEEL				120	3.19	0	23.41	26.893
35	0.00	10.80	0.00	257.73	50.80	0.00	8.19049	0.60	9.908
13	0.00	10.90	0.00	246.83	52.578	784.55	F	0.61	0.979
	SCHED 40 WET STEEL				120	6.04	0	1.21	10.888
36	0.00	10.80	0.00	257.73	50.80	0.00	8.19022	0.60	9.908
19	0.00	10.90	0.00	246.83	52.578	784.51	F	0.61	0.979
	SCHED 40 WET STEEL				120	6.04	0	1.21	10.888

C:\Program Files (x86)\Elite\Firew\PROJECTS\URBI SALA CETINJE..fiw Tuesday, February 18, 2025, 11:54 PM

FIRE - Fire Sprinkler Hydraulics Calculation Program
pReJkEr
Hell

Elite Software Development, Inc.
FISKULTURNA SALA CETINJE
Page 14

Fire Sprinkler Output Data

Overall Sprinkler Output Data

Flowing Sprinkler Node No.	Area Group Code	Sprinkler KFactor (Km)	Sprinkler Elevation (m)	Residual Pressure (kPa)	Flowing Area (m²)	Flowing Density (Lpm/m²)	Sprinkler Discharge (Lpm)
1		115.00	14.80	56.00	12.00	7.168	86.02
Sub Totals For Non-Group					12.00	7.168	86.02
2		115.00	14.10	70.26	12.00	8.030	96.36
Sub Totals For Non-Group					12.00	8.030	96.36
3		115.00	13.40	121.47	12.00	10.558	126.69
Sub Totals For Non-Group					12.00	10.558	126.69
4		115.00	12.70	159.18	12.00	12.086	145.03
Sub Totals For Non-Group					12.00	12.086	145.03
5		115.00	12.00	195.75	12.00	13.402	160.83
Sub Totals For Non-Group					12.00	13.402	160.83
6		115.00	11.30	217.72	12.00	14.135	169.61
Sub Totals For Non-Group					12.00	14.135	169.61
7		115.00	14.80	56.00	12.00	7.169	86.02
Sub Totals For Non-Group					12.00	7.169	86.02
8		115.00	14.10	70.27	12.00	8.030	96.36
Sub Totals For Non-Group					12.00	8.030	96.36
9		115.00	13.40	121.47	12.00	10.558	126.69
Sub Totals For Non-Group					12.00	10.558	126.69
10		115.00	12.70	159.18	12.00	12.086	145.03
Sub Totals For Non-Group					12.00	12.086	145.03
11		115.00	12.00	195.75	12.00	13.402	160.83
Sub Totals For Non-Group					12.00	13.402	160.83
12		115.00	11.30	217.73	12.00	14.135	169.62
Sub Totals For Non-Group					12.00	14.135	169.62
Totals For All Groups					144.00	10.896	1569.08

C:\Program Files (x86)\Elite\Firew\PROJECTS\URBI SALA CETINJE..fiw Tuesday, February 18, 2025, 11:54 PM

FIRE - Fire Sprinkler Hydraulics Calculation Program
pReJkEr
Hell

Elite Software Development, Inc.
FISKULTURNA SALA CETINJE
Page 15

Fire Sprinkler Output Summary

Hydraulically Most Demanding Sprinkler Node

HMD Sprinkler Node Number:	1	
HMD Actual Residual Pressure:	56.00	kPa
HMD Actual GPM:	86.02	Lpm

Sprinkler Summary

Sprinkler System Type:	Dry	
Specified Area Of Application:	90.00	m²
Adjusted Area Of Application:	117.00	ft²
Minimum Desired Density:	4.999	Lpm/m²
Application Average Density:	17.434	Lpm/m²
Application Adjusted Density (not required by NFPA 13):	13.411	gpm/ft²
Application Average Area Per Sprinkler:	7.50	m²
Adjusted Area Per Sprinkler (not required by NFPA 13):	104.95	ft²
Sprinkler Flow:	1569.08	Lpm
Average Sprinkler Flow:	130.76	Lpm

Flow Velocity And Imbalance Summary

Maximum Flow Velocity (In Pipe 13 - 35)	6.04	m/sec
Maximum Velocity Pressure (In Pipe 13 - 35)	18.22	kPa
Allowable Maximum Nodal Pressure Imbalance:	1.5003	kPa
Actual Maximum Nodal Pressure Imbalance:	0.0080	kPa
Actual Average Nodal Pressure Imbalance:	0.0018	kPa
Actual Maximum Nodal Flow Imbalance:	0.0067	Lpm
Actual Average Nodal Flow Imbalance:	0.0019	Lpm

Overall Network Summary

Number Of Unique Pipe Sections:	36	
Number Of Flowing Sprinklers:	12	
Pipe System Water Volume:	1402.11	L
Sprinkler Flow:	1569.08	Lpm
Non-Sprinkler Flow:	0.00	Lpm
Minimum Required Residual Pressure At System Inflow Node:	545.94	kPa
Demand Flow At System Inflow Node:	1569.06	Lpm

C:\Program Files (x86)\Elite\Firew\PROJECTS\URBI SALA CETINJE..fiw Tuesday, February 18, 2025, 11:54 PM

# UŽA SITUACIJA
R=1:250

PROJEKTANT "URBI.PRO" d.o.o., Podgorica, ul.Radosava Burica bb, telefon 067/006-012, e-mail office@urbipro.me PDV: 30/31-14987-7, PIB: 03059847	INVESTITOR **MINISTARSTVO PROSVJETE,NAUKE I INOVACIJA** **ulica Vaka Đurovića bb** **81000 Podgorica**
Objekat: Rekonstrukcija-dogradnja Sala za fizičko vaspitanje i uređenje školskog dvorišta JU OŠ "Lovćenski partizanski odred"	Lokacija: Dio UP 479, u zahvatu DUP-a "Bogdanov kraj(Zona C)", kat . parc. br. 3290/1 , 3291/2,3287/1 i 3293/1, K.O. Cetinje I, Opština Cetinje
Autor projekta: Arh. Veselin Radulović, dipl. ing.	
Vodeći projektant: Dušan Džudović d.i.a.	Vrsta tehničke dokumentacije: GLAVNI PROJEKAT
Odgovorni projektant: Vuk Kasalica dipl.inž.maš.	Dio tehničke dokumentacije: SPRINKLER INSTALACIJA — RAZMJERA: R=1:50
Saradnik/ca:	Prilog: SITUACIJA — Br.priloga: 3.1 — Br.strane: 98
Datum izrade: Jul, 2025. god.	Datum revizije:

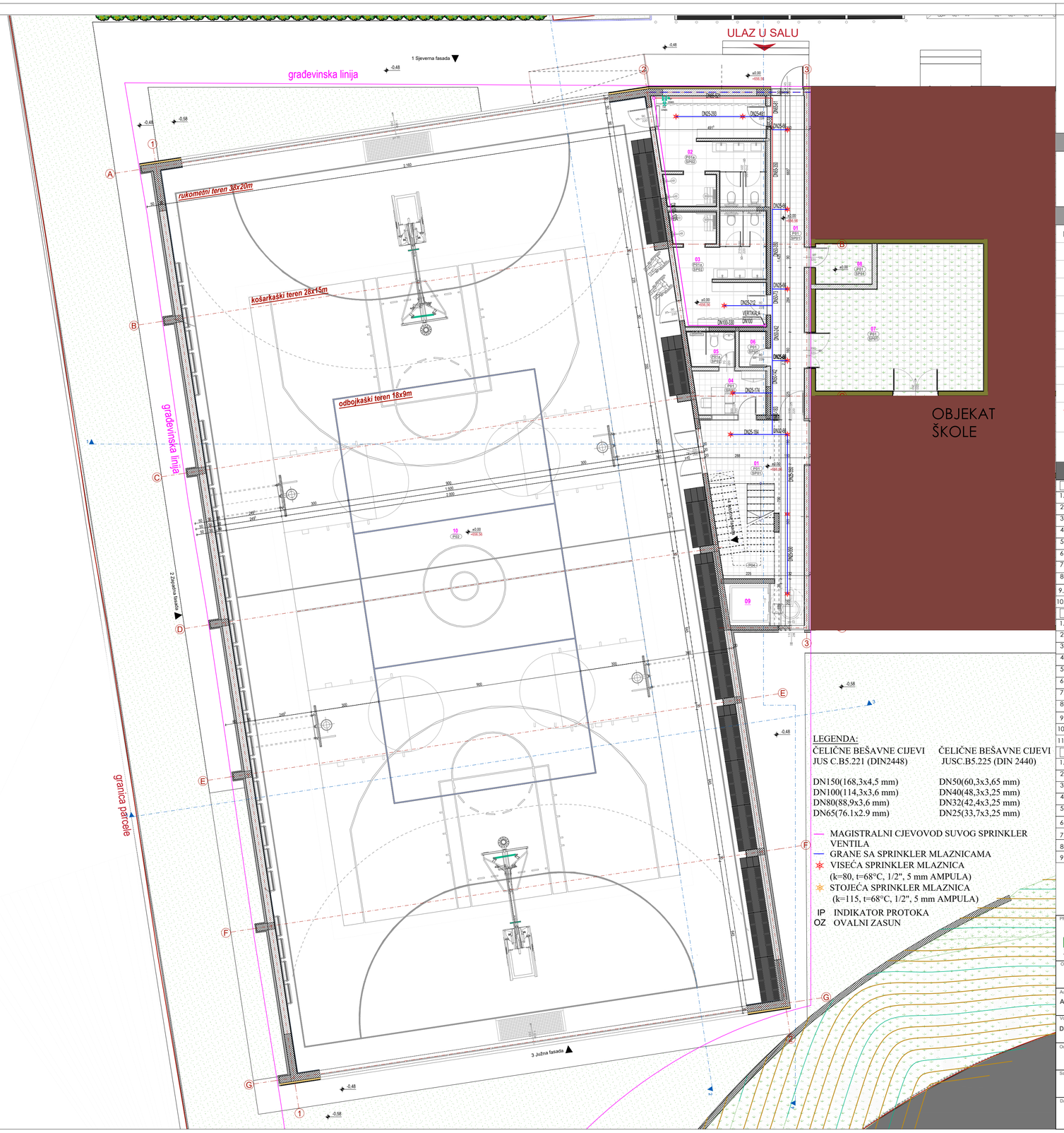

LEGENDA:

ČELIČNE BEŠAVNE CIJEVI JUS C.B5.221 (DIN2448)	ČELIČNE BEŠAVNE CIJEVI JUSC.B5.225 (DIN 2440)
DN150(168,3x4,5 mm)	DN50(60,3x3,65 mm)
DN100(114,3x3,6 mm)	DN40(48,3x3,25 mm)
DN80(88,9x3,6 mm)	DN32(42,4x3,25 mm)
DN65(76.1x2.9 mm)	DN25(33,7x3,25 mm)

- MAGISTRALNI CJEVOVOD SUVOG SPRINKLER VENTILA
- GRANE SA SPRINKLER MLAZNICAMA
- VISEĆA SPRINKLER MLAZNICA (k=80, t=68°C, 1/2", 5 mm AMPULA)
- STOJEĆA SPRINKLER MLAZNICA (k=115, t=68°C, 1/2", 5 mm AMPULA)
- IP INDIKATOR PROTOKA
- OZ OVALNI ZASUN

# OSNOVA PRIZEMLJA SA PARTEROM
R=1:100

0 1m 5m 10m

LEGENDA - ULAZI

- Ulaz u salu iz dvorišta
- Ulaz iz škole u salu

LEGENDA - OZNAKE I POVRŠINE PROSTORIJA:

BR	Naziv prostorije	Obrada poda	Obrada zida	Obrada plafona	P (m^2)
1	Holski prostor +hodnik	Ker. pločice	Disperzija	Disperzija	50,25
2	Ženska svlačionica	Ker. pločice	Ker.pločice/ Disperzija	Disperzija	22,44
3	Muška svlačionica	Ker. pločice	Ker.pločice/ Disperzija	Disperzija	20,76
4	Prostorija za profesora	Ker. pločice	Disperzija	Disperzija	6,72
5	Toalet za profesora	Ker. pločice	Ker. pločice	Disperzija	3,26
6	Tehnička Rack prostorija	Ker. pločice	Disperzija	Disperzija	1,98
7	Spravarnica	Ker. pločice	Disperzija	Disperzija	43,15
8	Tehnička prostorija-Sprinkler	Ker. pločice	Disperzija	Disperzija	4,76
9	Lift		Disperzija		3,52
10	Fiskulturna sala	Gumena podloga	Masna boja do visine 4m/ Disperzija od 4-8m	Sendvič panel	867,42
	UKUPNA NETO POVRŠINA PRIZEMLJA				1.024,26
	UKUPNA BRUTO POVRŠINA PRIZEMLJA				1.030,74

SLOJEVI PODOVA

P01 hodnici,ostave,kancelarije

1.	Keramika na ljepilu	d=1cm
2.	Cementna košuljica	d=5cm
3.	PE folija	d=/cm
4.	Termoizolacija	d=7cm
5.	Hidroizolacija	d=/cm
6.	Podna ploča	d=12cm
7.	Tampon sloj	d=40cm
8.	AB Temeljna ploča	d=50cm
9.	Ibažni sloj + HI+Ibažni sloj	d=5+1+5cm
10.	Šljunak	

P01a toaleti,svlačionice

1.	Keramika na ljepilu	d=1cm
2.	Hidroizolacija	d=/cm
3.	Cementna košuljica	d=5cm
4.	PE folija	d=/cm
5.	Termoizolacija	d=7cm
6.	Hidroizolacija	d=/cm
7.	Podna ploča	d=12cm
8.	Tampon sloj	d=40cm
9.	AB Temeljna ploča	d=50cm
10.	Ibažni sloj + HI+Ibažni sloj	d=5+1+5cm
11.	Šljunak/Nasip	

P02 fiskulturna sala

1.	Elastični pod	d=4cm
2.	Cementna košuljica	d=4cm
3.	Termoizolacija	d=5cm
4.	Hidroizolacija	d=2cm
5.	Podna ploča	d=12cm
6.	Tampon sloj	d=40cm
7.	AB Temeljna ploča	d=50cm
8.	Ibažni sloj + HI+Ibažni sloj	d=5+1+5cm
9.	Šljunak	

SLOJEVI UNUTRAŠNIH ZIDOVA

UZ01 unutrašnji zid 1

1.	Glet + Disperzivni premaz	d=/cm
2.	Malter	d=2cm
3.	Pregradni zid (Ytong)	d=10,20 cm
4.	Malter	d=2cm
5.	Keramika na ljepilu	d=1cm

UZ02 unutrašnji zid 2

1.	Glet + Disperzivni premaz	d=/cm
2.	Malter	d=2cm
3.	Pregradni zid (Ytong)	d=10,20cm
4.	Malter	d=2cm
5.	Glet + Disperzivni premaz	d=1cm

UZ03 unutrašnji zid 3

1.	Keramika na ljepilu	d=1cm
2.	2x Vlagootporna gips tabla	d=2,5cm
3.	Potkonstukcija sa ispunom od mineralne vune	d=5 cm

UZ04 unutrašnji zid 3

1.	Glet + Disperzivni premaz	d=/cm
2.	2x standard gipskartonska ploča	d=2,5cm
3.	Potkonstrukcija sa ispunom od mineralne vune	d=5 cm

UZ05 unutrašnji zid 4

1.	Keramika na ljepilu	d=1cm
2.	Malter	d=2cm
3.	Pregradni zid (Ytong)	d=10/20 cm
4.	Malter	d=2cm
5.	Keramika na ljepilu	d=1cm

SPUŠTENI PLAFON

SP01

1.	Potkonstrukcija	d=5cm
2.	Gipskartonska standard ploča	d=1,25cm
3.	Glet +disperzija	d=/ cm

SP02

1.	Potkonstrukcija	d=5cm
2.	Gipskartonska vlagootporna ploča	d=1,25cm
3.	Glet +disperzija	d=/ cm

SLOJEVI SPOLJNIH ZIDOVA

SZ01 spoljni zidovi suterena

1.	Šljunčani tampon	d=20+ cm
2.	Čepasta folija	d=1cm
3.	Termoizolacija	d=5cm
4.	Hidroizolacija	d=1cm
5.	AB zid	d=20cm
6.	Malter	d=2cm
7.	Glet + Disperzivni premaz	d=/cm
8.	Zaštitni paneli do 2,6m	d=2,4cm

SLOJEVI FASADNIH ZIDOVA

FZ01 fasadni zidovi

1.	Ventilisana fasada-Lim	d=0,6cm
2.	Vazdušni sloj	d=2cm
3.	Parna brana	d=/cm
4.	Termoizolacija	d=8cm
5.	AB zid	d=30cm
6.	Malter	d=2cm
7.	Glet + Disperzivni premaz	d=/cm

FZ02 fasadni zidovi

1.	Dekorativni malter-bavalit	d=0,5cm
2.	2 sloja ljepila +mrežica	d=/cm
3.	Termoizolacija	d=5/10cm
4.	AB zid	d=30cm
5.	Malter	d=2cm
6.	Glet + Disperzivni premaz	d=/cm

FZ03 fasadni zidovi

1.	Ventilisana fasada-Keramika	d=0,6cm
2.	Vazdušni sloj	d=2cm
3.	Parna brana	d=/cm
4.	Termoizolacija	d=8cm
5.	AB zid	d=30cm
6.	Malter	d=2cm
7.	Glet + Disperzivni premaz	d=/cm

PROJEKTANT
URBI.PRO
"URBI.PRO" d.o.o., Podgorica,
ul.Radosava Burica bb, telefon 067/006-012,
e-mail office@urbipro.me
PDV: 30/31-14987-7, PIB: 03059847

INVESTITOR
MINISTARSTVO PROSVJETE,NAUKE I INOVACIJA
ulica Vaka Đurovića bb
81000 Podgorica

Objekat:
Rekonstrukcija-dogradnja Sala za fizičko vaspitanje i uređenje školskog dvorišta JU OŠ "Lovćenski partizanski odred"

Lokacija:
Dio UP 479, u zahvatu DUP-a "Bogdanov kraj(Zona C)", kat . parc. br. 3290/1 , 3291/2,3287/1 i 3293/1, K.O. Cetinje I, Opština Cetinje

Autor projekta:
Arh. Veselin Radulović, dipl. ing.

Vodeći projektant:
Dušan Džudović d.i.a.

Vrsta tehničke dokumentacije:
GLAVNI PROJEKAT

Odgovorni projektant:
Vuk Kasalica dipl.inž.maš.

Dio tehničke dokumentacije:
SPRINKLER INSTALACIJA

RAZMJERA:
R=1:50

Saradnik/ca:

Prilog:
OSNOVA PRIZEMLJA

Br.priloga: **3.2**

Br.strane: **99**

Datum izrade:
Jul, 2025. god.

Datum revizije:

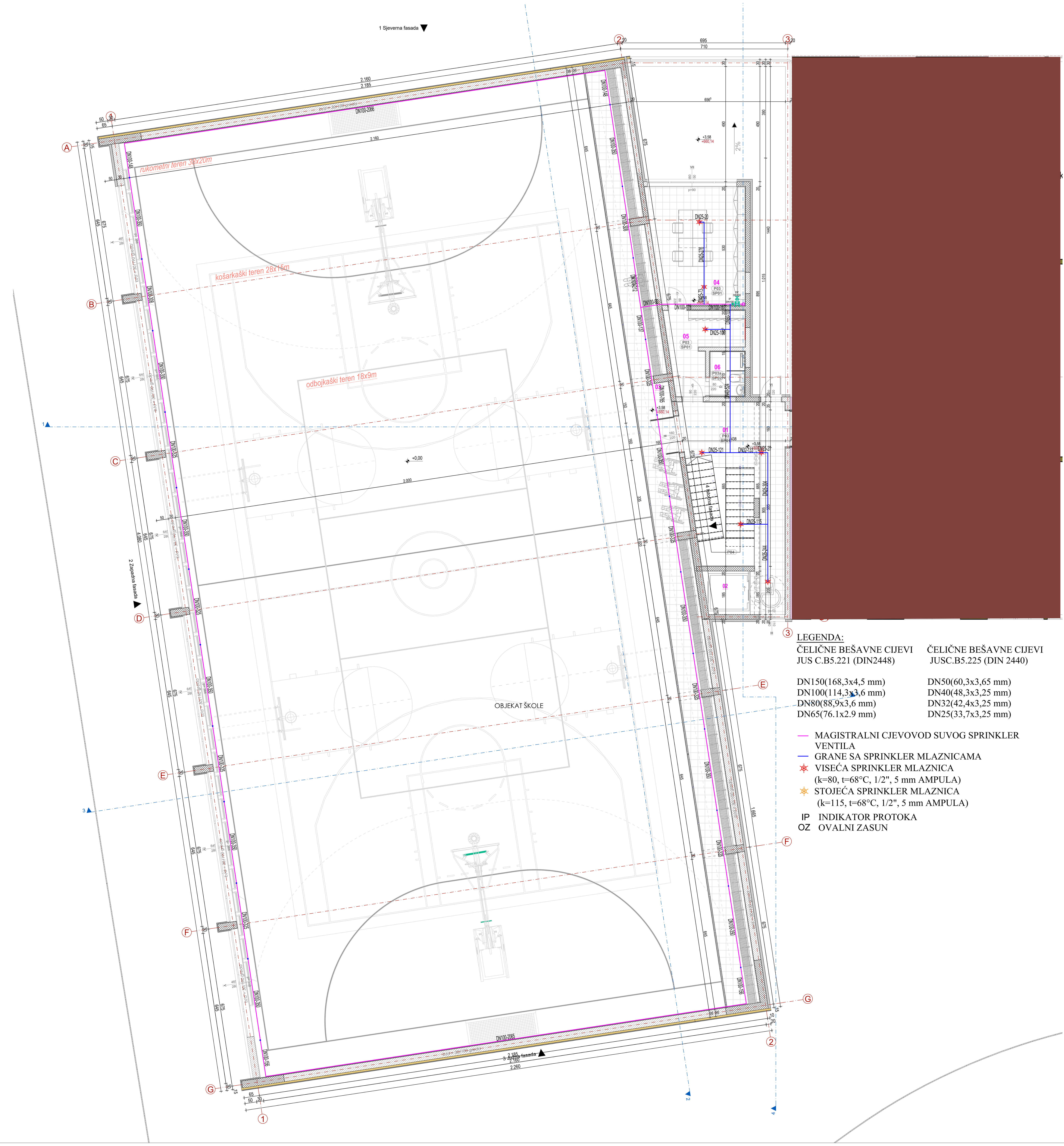

LEGENDA:

ČELIČNE BEŠAVNE CIJEVI
JUS C.B5.221 (DIN2448)

DN150(168,3x4,5 mm)
DN100(114,3x3,6 mm)
DN80(88,9x3,6 mm)
DN65(76.1x2.9 mm)

ČELIČNE BEŠAVNE CIJEVI
JUSC.B5.225 (DIN 2440)

DN50(60,3x3,65 mm)
DN40(48,3x3,25 mm)
DN32(42,4x3,25 mm)
DN25(33,7x3,25 mm)

MAGISTRALNI CJEVOVOD SUVOG SPRINKLER VENTILA
GRANE SA SPRINKLER MLAZNICAMA
VISEĆA SPRINKLER MLAZNICA (k=80, t=68°C, 1/2", 5 mm AMPULA)
STOJEĆA SPRINKLER MLAZNICA (k=115, t=68°C, 1/2", 5 mm AMPULA)
IP INDIKATOR PROTOKA
OZ OVALNI ZASUN

# OSNOVA GALERIJE
R=1:100

0 1m 5m 10m

LEGENDA - ULAZI

Ulaz iz škole u salu

LEGENDA - OZNAKE I POVRŠINE PROSTORIJA:

BR	Naziv prostorije	Obrada poda	Obrada zida	Obrada plafona	P (m²)
1	Topla veza sa školom+stepenište	Ker. pločice	Disperzija	Disperzija	30,47
2	Lift	Ker. pločice	Disperzija	Disperzija	3,52
3	Galerija	Ker. pločice	Disperzija	Disperzija	63,40
4	Prostorija delegate i sudije	Ker. pločice	Disperzija	Disperzija	20,57
5	Svlačionica	Ker. pločice	Disperzija	Disperzija	5,39
6	Toalet	Ker. pločice	Ker. pločice	Disperzija	6,52
	UKUPNA NETO POVRŠINA GALERIJE				129,87
	UKUPNA BRUTO POVRŠINA GALERIJE				200,12

SLOJEVI PODOVA

P01	hodnici,ostave,kancelarije	
1.	Keramika na ljepilu	d=1cm
2.	Cementna košuljica	d=5cm
3.	PE folija	d=/cm
4.	Termoizolacija	d=7cm
5.	Hidroizolacija	d=/cm
6.	Podna ploča	d=12cm
7.	Tampon sloj	d=40cm
8.	AB Temeljna ploča	d=50cm
9.	Libažni sloj + HI+Libažni sloj	d=5+1+5cm
10.	Šljunak	
P01a	toaleti,svlačionice	
1.	Keramika na ljepilu	d=1cm
2.	Hidroizolacija	d=/cm
3.	Cementna košuljica	d=5cm
4.	PE folija	d=/cm
5.	Termoizolacija	d=7cm
6.	Hidroizolacija	d=/cm
7.	Podna ploča	d=12cm
8.	Tampon sloj	d=40cm
9.	AB Temeljna ploča	d=50cm
10.	Libažni sloj + HI+Libažni sloj	d=5+1+5cm
11.	Šljunak/Nasip	
P02	fiskulturna sala	
1.	Elastični pod	d=4cm
2.	Cementna košuljica	d=4cm
3.	Termoizolacija	d=5cm
4.	Hidroizolacija	d=2cm
5.	Podna ploča	d=12cm
6.	Tampon sloj	d=40cm
7.	AB Temeljna ploča	d=50cm
8.	Libažni sloj + HI+Libažni sloj	d=5+1+5cm
9.	Šljunak	

SLOJEVI UNUTRAŠNJIH ZIDOVA

UZ01	unutrašnji zid 1	
1.	Glet + Disperzivni premaz	d=/cm
2.	Malter	d=2cm
3.	Pregradni zid (Ytong)	d=10,20 cm
4.	Malter	d=2cm
5.	Keramika na ljepilu	d=1cm
UZ02	unutrašnji zid 2	
1.	Glet + Disperzivni premaz	d=/cm
2.	Malter	d=2cm
3.	Pregradni zid (Ytong)	d=10,20cm
4.	Malter	d=2cm
5.	Glet + Disperzivni premaz	d=1cm
UZ03	unutrašnji zid 3	
1.	Keramika na ljepilu	d=1cm
2.	2x Vlagootporna gips tabla	d=2,5cm
3.	Potkonstukcija sa ispunom od mineralne vune	d=5 cm
UZ04	unutrašnji zid 3	
1.	Glet + Disperzivni premaz	d=/cm
2.	2x Standard gipskartonska ploča	d=2,5cm
3.	Potkonstrukcija sa ispunom od mineralne vune	d=5 cm
UZ05	unutrašnji zid 4	
1.	Keramika na ljepilu	d=1cm
2.	Malter	d=2cm
3.	Pregradni zid (Ytong)	d=10/20 cm
4.	Malter	d=2cm
5.	Keramika na ljepilu	d=1cm

SPUŠTENI PLAFON

SP01		
1.	Potkonstrukcija	d=5cm
2.	Gipskartonska standard ploča	d=1,25cm
3.	Glet +disperzija	d=/ cm
SP02		
1.	Potkonstrukcija	d=5cm
2.	Gipskartonska vlagootporna ploča	d=1,25cm
3.	Glet +disperzija	d=/ cm

SLOJEVI SPOLJNIH ZIDOVA

SZ01	spoljni zidovi suterena	
1.	Šljunčani tampon	d=20+ cm
2.	Čepasta folija	d=1cm
3.	Termoizolacija	d=5cm
4.	Hidroizolacija	d=1cm
5.	AB zid	d=20cm
6.	Malter	d=2cm
7.	Glet + Disperzivni premaz	d=/cm
8.	Zaštitni paneli do 2,6m	d=2,4cm

SLOJEVI FASADNIH ZIDOVA

FZ01	fasadni zidovi	
1.	Ventilisana fasada-Lim	d=0,6cm
2.	Vazdušni sloj	d=2cm
3.	Parna brana	d=/cm
4.	Termoizolacija	d=8cm
5.	AB zid	d=30cm
6.	Malter	d=2cm
7.	Glet + Disperzivni premaz	d=/cm
FZ02	fasadni zidovi	
1.	Dekorativni malter-bavalit	d=0,5cm
2.	2 sloja ljepila +mrežica	d=/cm
3.	Termoizolacija	d=5/10cm
4.	AB zid	d=30cm
5.	Malter	d=2cm
6.	Glet + Disperzivni premaz	d=/cm
FZ03	fasadni zidovi	
1.	Ventilisana fasada-Keramika	d=0,6cm
2.	Vazdušni sloj	d=2cm
3.	Parna brana	d=/cm
4.	Termoizolacija	d=8cm
5.	AB zid	d=30cm
6.	Malter	d=2cm
7.	Glet + Disperzivni premaz	d=/cm

PROJEKTANT
"URBI.PRO" d.o.o., Podgorica,
ul.Radosava Burica bb, telefon 067/006-012,
e-mail office@urbipro.me
PDV: 30/31-14987-7, PIB: 03059847

INVESTITOR
MINISTARSTVO PROSVJETE,NAUKE I INOVACIJA
ulica Vaka Đurovića bb
81000 Podgorica

Prijestonica Cetinje
Old Royal Capital Cetinje

Objekat: Rekonstrukcija-dogradnja Sala za fizičko vaspitanje i uređenje školskog dvorišta JU OŠ "Lovćenski partizanski odred"

Lokacija: Dio UP 479, u zahvatu DUP-a "Bogdanov kraj(Zona C)", kat . parc. br. 3290/1 , 3291/2,3287/1 i 3293/1, K.O. Cetinje I, Opština Cetinje

Autor projekta: Arh. Veselin Radulović, dipl. ing.
Vodeći projektant: Dušan Džudović d.i.a.
Odgovorni projektant: Vuk Kasalica dipl.inž.maš.
Saradnik/ca:

Vrsta tehničke dokumentacije: GLAVNI PROJEKAT

Dio tehničke dokumentacije: SPRINKLER INSTALACIJA

RAZMJERA: R=1:50

Prilog: OSNOVA GALERIJE

Br.priloga: 3.3

Br.strane: 100

Datum izrade: Jul, 2025. god.

Datum revizije:

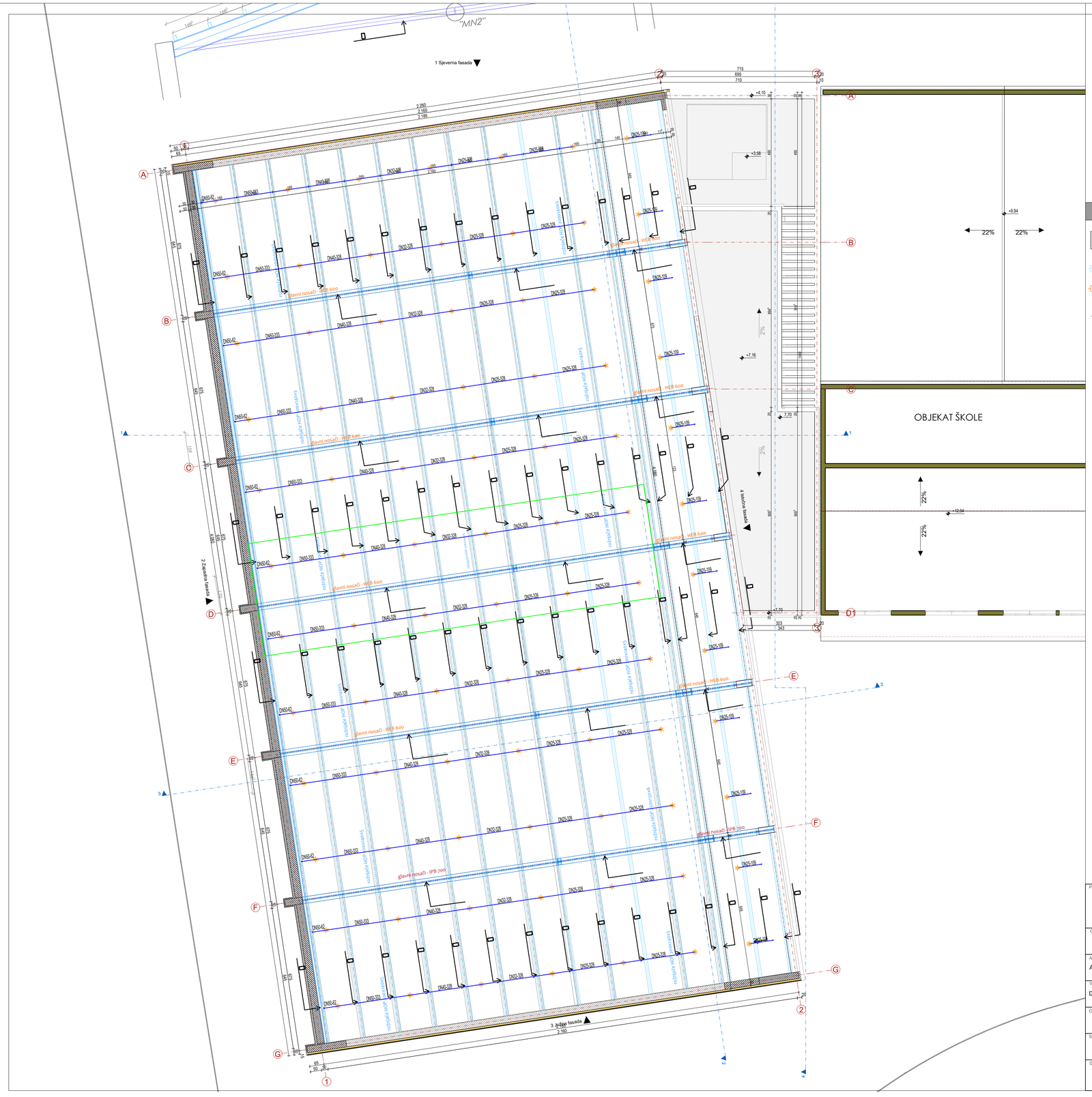

# OSNOVA KROVNE KONSTRUKCIJE
R=1:100

0 1m 5m 10m

LEGENDA

Ravni krov

Rožnjača HOP 200x140x5

Glavni nosač HEB 600

±0.00 relativna visinska kota

LEGENDA:

ČELIČNE BEŠAVNE CIJEVI JUS C.B5.221 (DIN2448)	ČELIČNE BEŠAVNE CIJEVI JUSC.B5.225 (DIN 2440)
DN150(168,3x4,5 mm)	DN50(60,3x3,65 mm)
DN100(114,3x3,6 mm)	DN40(48,3x3,25 mm)
DN80(88,9x3,6 mm)	DN32(42,4x3,25 mm)
DN65(76.1x2.9 mm)	DN25(33,7x3,25 mm)

— MAGISTRALNI CJEVOVOD SUVOG SPRINKLER VENTILA
— GRANE SA SPRINKLER MLAZNICAMA
VISEĆA SPRINKLER MLAZNICA (k=80, t=68°C, 1/2", 5 mm AMPULA)
STOJEĆA SPRINKLER MLAZNICA (k=115, t=68°C, 1/2", 5 mm AMPULA)
IP INDIKATOR PROTOKA
OZ OVALNI ZASUN

PROJEKTANT: "URBI.PRO" d.o.o., Podgorica, ul.Radosava Burica bb, telefon 067/006-012, e-mail office@urbipro.me PDV: 30/31-14987-7, PIB: 03059847	INVESTITOR: MINISTARSTVO PROSVJETE,NAUKE I INOVACIJA ulica Vaka Đurovića bb 81000 Podgorica	Pripremio Cetinje / Od Kraljevog Grijeha Cetinje
Objekat: Rekonstrukcija-dogradnja Sala za fizičko vaspitanje i uređenje školskog dvorišta JU OŠ "Lovćenski partizanski odred"	Lokacija: Dio UP 479, u zahvatu DUP-a "Bogdanov kraj(Zona C)", kat . parc. br. 3290/1 , 3291/2,3287/1 i 3293/1, K.O. Cetinje I, Opština Cetinje	
Autor projekta: Arh. Veselin Radulović, dipl. ing.		
Vodeći projektant: Dušan Džudović d.i.a.	Vrsta tehničke dokumentacije: GLAVNI PROJEKAT	
Odgovorni projektant: Vuk Kasalica dipl.inž.maš.	Dio tehničke dokumentacije: SPRINKLER INSTALACIJA	RAZMJERA: R=1:50
Saradnik/ca:	Prilog: KROVNA KONSTRUKCIJA	Br.priloga: 3.4 / Br.strane: 101
Datum izrade: Jul, 2025. god.	Datum revizije:	

PRESJECI
R=1:100

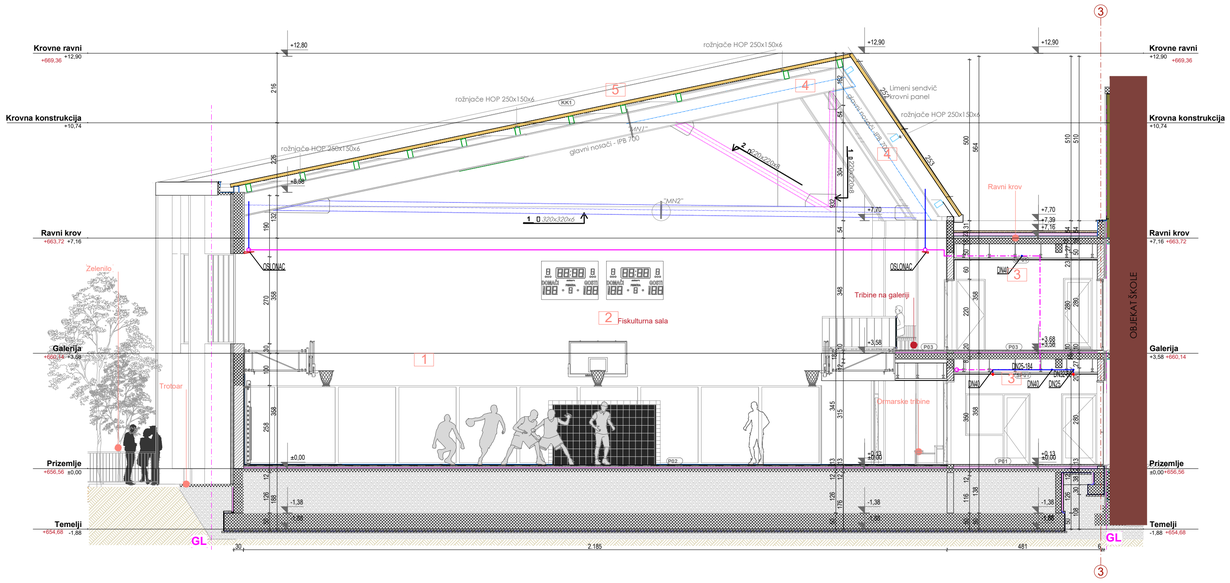

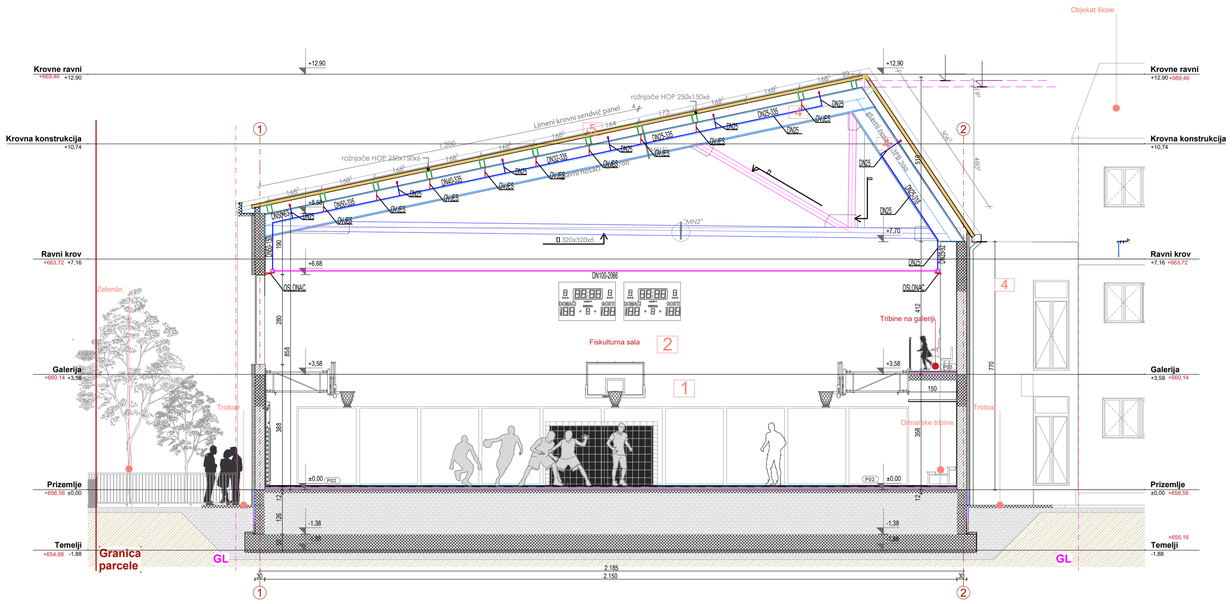

LEGENDA - OZNAKE U NOVOPROJEKTOVANOM RJEŠENJU

- Građevinska linija
- Granica katastarske parcele

1. masna boja do visine h=4m u boji RAL 9010
2. malter u boji RAL 040 50 30
3. završna obrada u boji RAL 9010
4. čelična konstrukcija u boji RAL 9010
5. Završna obrada krovnog pokrivača u boji RAL 7038

+-0.00 Relativna visinska kota
780.39 Apsolutna visinska kota

PROJEKTANT "URBI.PRO" d.o.o., Podgorica, ul.Radosava Burica bb, telefon 067/006-012, e-mail office@urbipro.me PDV: 30/31-14987-7, PIB: 03059847		INVESTITOR **MINISTARSTVO PROSVJETE,NAUKE I INOVACIJA** **ulica Vaka Đurovića bb** **81000 Podgorica**	
Objekat: Rekonstrukcija-dogradnja Sala za fizičko vaspitanje i uređenje školskog dvorišta JU OŠ "Lovćenski partizanski odred"		Lokacija: Dio UP 479, u zahvatu DUP-a "Bogdanov kraj(Zona C)", kat . parc. br. 3290/1 , 3291/2,3287/1 i 3293/1, K.O. Cetinje I, Opština Cetinje	
Autor projekta: **Arh. Veselin Radulović, dipl. ing.**			
Vodeći projektant: **Dušan Džudović d.i.a.**		Vrsta tehničke dokumentacije: GLAVNI PROJEKAT	
Odgovorni projektant: Vuk Kasalica dipl.inž.maš.		Dio tehničke dokumentacije: SPRINKLER INSTALACIJA	RAZMJERA: R=1:50
Saradnik/ca:		Prilog: PRESJEK 1-1, 3-3	Br.priloga: 3.5 / Br.strane: 102
Datum izrade: Jul, 2025. god.		Datum revizije:	

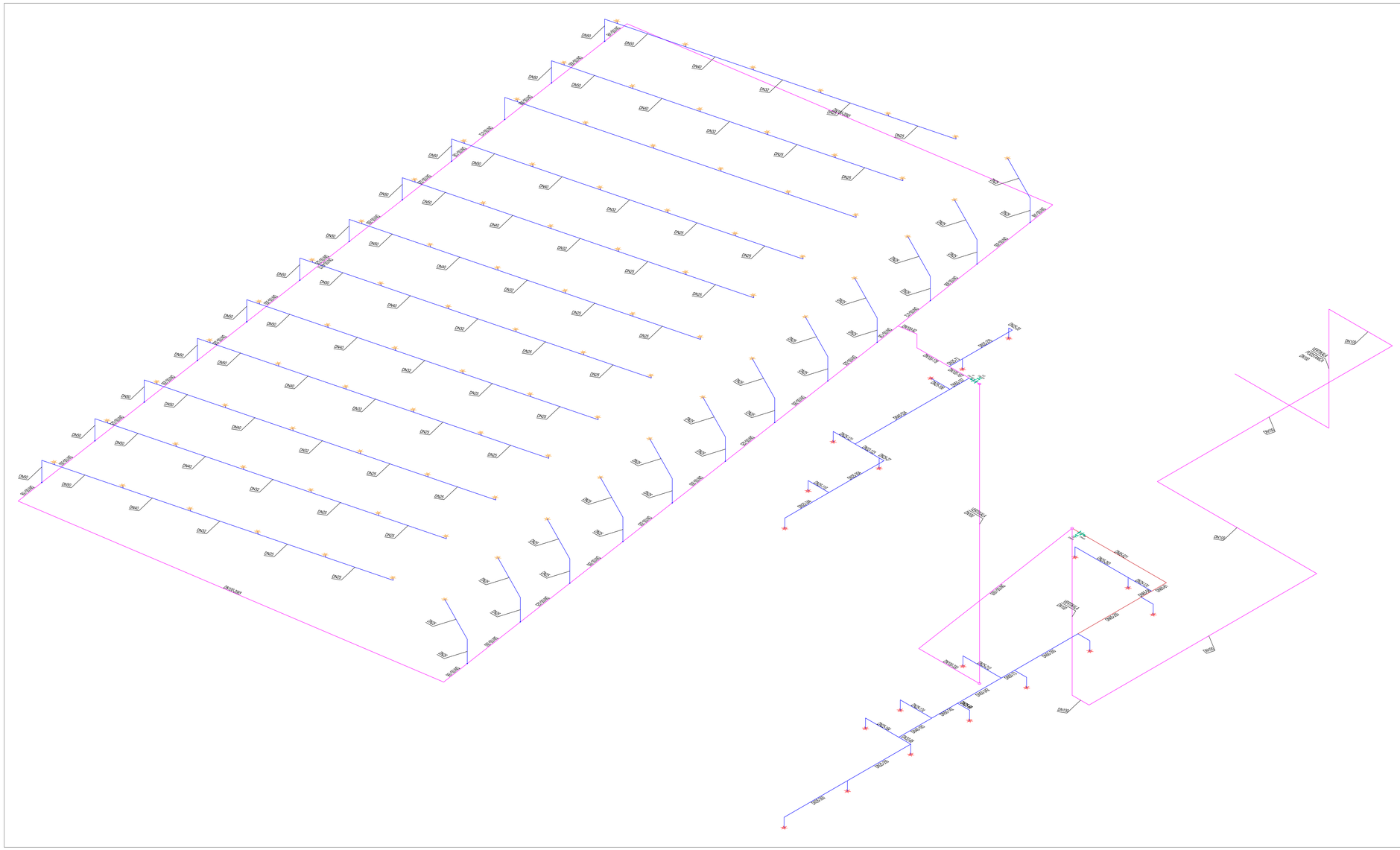

PROJEKTANT: "URBI.PRO" d.o.o., Podgorica, ul.Radoslava Burića bb, telefon 067/006-012, e-mail: office@urbipro.me PDV: 30/31/1498/17, PIB: 03059847	INVESTITOR: **MINISTARSTVO PROSVJETE NAUKE I INOVACIJA** **ulica Vaka Đurovića bb 81000 Podgorica**
Objekat: Rekonstrukcija-dogradnja Sala za fizičko vaspitanje i uređenje školskog dvorišta JU OŠ "Luvčenski partizanski odred"	Lokacija: Dio UP 479, u zahvatu DUPa "Bogdanov krajZona C1", kat., parc. br 3290/1 , 3291/2,3287/1 i 3293/1, K.O. Cetinje 1, Opština Cetinje
Ovlaštenje: Arh. Veselin Radulović, dipl. ing.	
Ovlaštenje projektant: Dušan Dibulović d.i.a.	Vrsta tehničke dokumentacije: GLAVNI PROJEKAT
Ovlaštenje projektant: Vuk Kasalica dipl.inž.mak.	Dio tehničke dokumentacije: SPRINKLER INSTALACIJA — Kvalitet: R=1:50
Saradnik:	Prilog: AKSONOMETRIJA — Br.prilog: 3.6 — Br.strana: 103
Datum izrade: Jul, 2025, god.	Datum revizije:

Presjek A-A

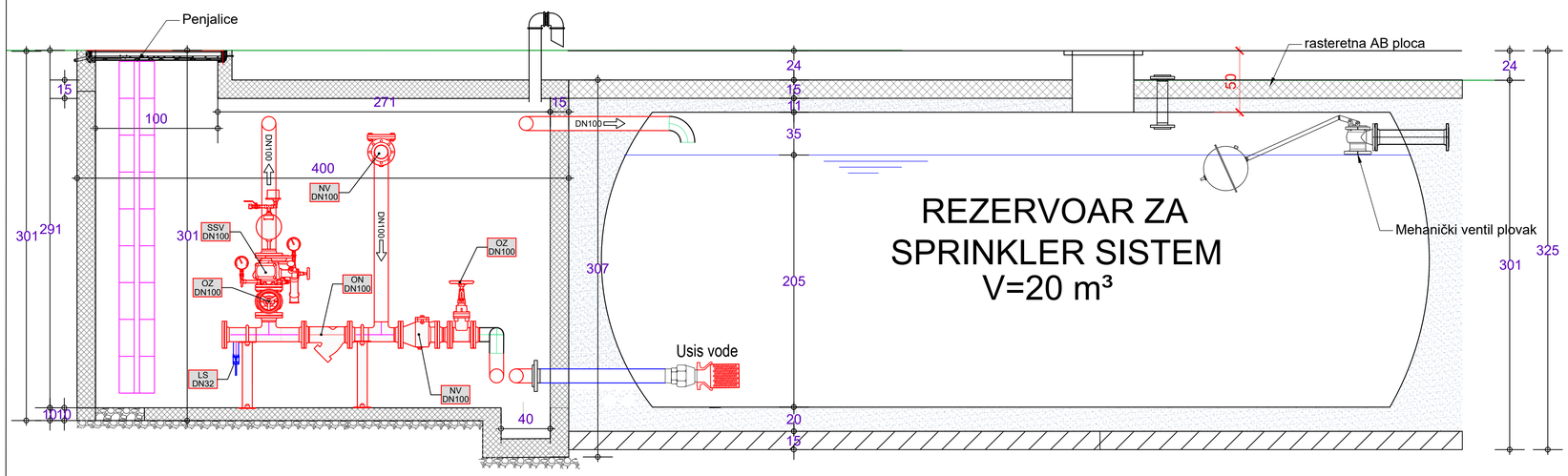

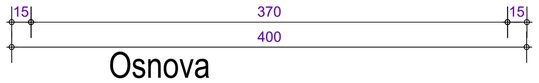

Osnova

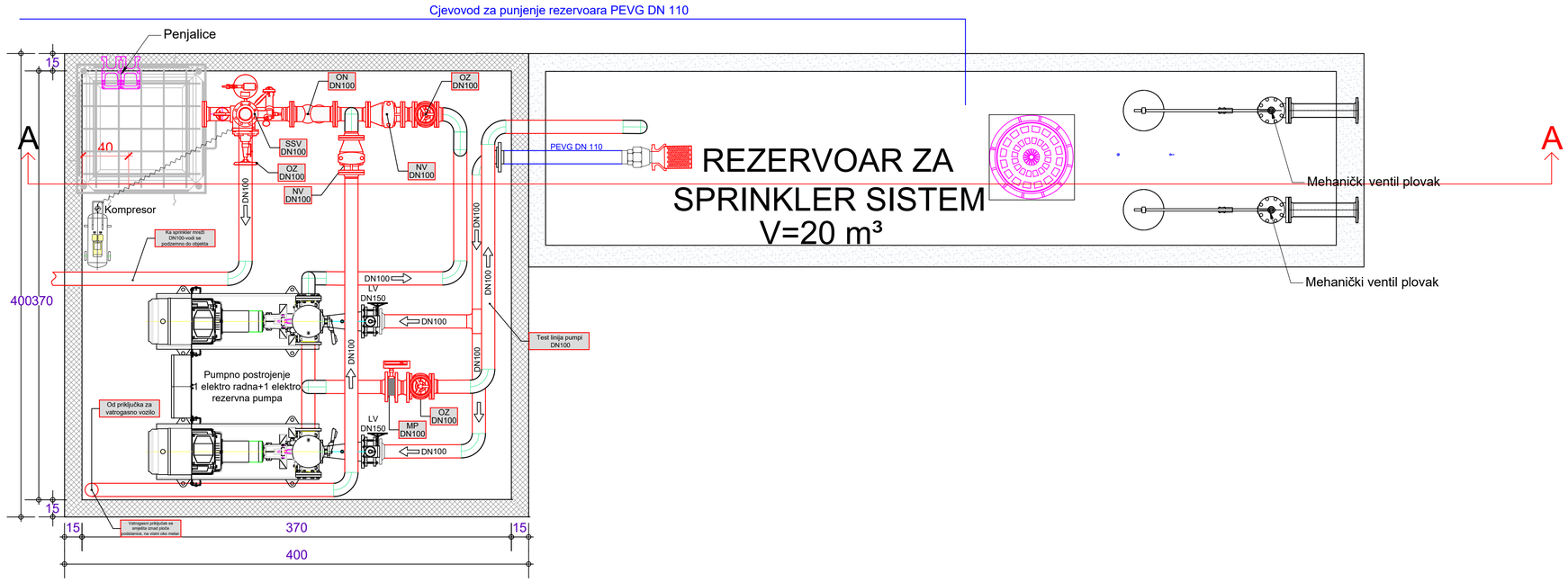

MP-MJERAČ PROTOKA
OZ-OVALNI ZASUN
SSV-SUVI SPRINKLER VENTIL
ON-ODVAJAČ NEČISTOĆA
NV-NEPOVRATNI VENTIL
LV-LEPTIR VENTIL
K-KOMPENZATOR GUMENI

PROJEKTANT "URBI.PRO" d.o.o., Podgorica, ul.Radosava Burica bb, telefon 067/006-012, e-mail office@urbipro.me PDV: 30/31-14987-7, PIB: 03059847		INVESTITOR **MINISTARSTVO PROSVJETE,NAUKE I INOVACIJA ulica Vaka Đurovića bb 81000 Podgorica**	
Objekat: Rekonstrukcija-dogradnja Sala za fizičko vaspitanje i uređenje školskog dvorišta JU OŠ "Lovćenski partizanski odred"		Lokacija: Dio UP 479, u zahvatu DUP-a "Bogdanov kraj(Zona C)", kat . parc. br. 3290/1 , 3291/2,3287/1 i 3293/1, K.O. Cetinje I, Opština Cetinje	
Autor projekta: **Arh. Veselin Radulović, dipl. ing.**			
Vodeći projektant: **Dušan Džudović d.i.a.**		Vrsta tehničke dokumentacije: GLAVNI PROJEKAT	
Odgovorni projektant: Vuk Kasalica dipl.inž.maš.		Dio tehničke dokumentacije: SPRINKLER INSTALACIJA	RAZMJERA: R=1:50
Saradnik/ca:		Prilog: PODSTANICA I REZERVOAR	Br.priloga: 3.7 / Br.strane: 104
Datum izrade: Jul, 2025. god.		Datum revizije:	

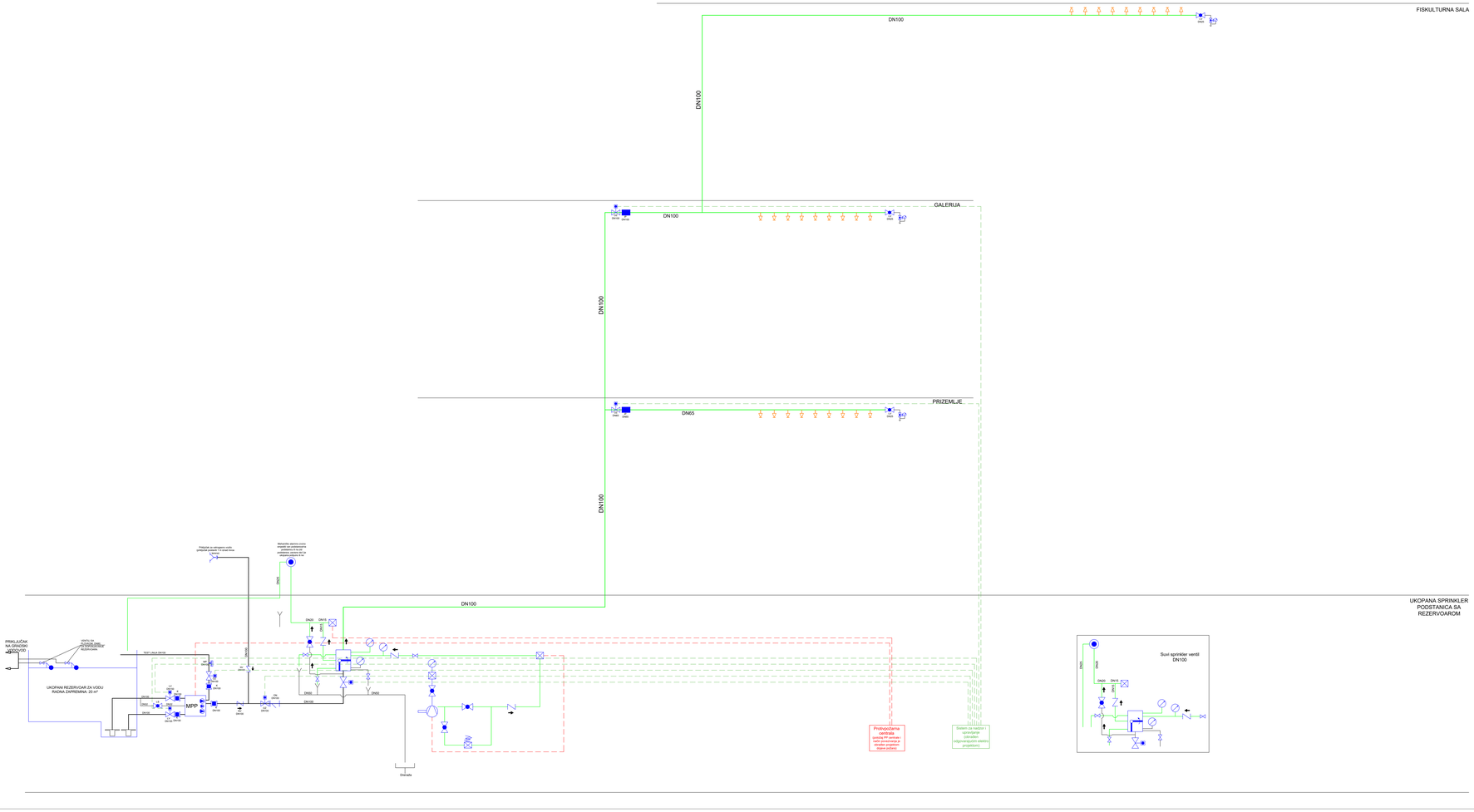

Priključak za vatrogasno vozilo (priključak sadrži 2 ventila i jedan slepi poklopac)
Mikrovilna detekcija (nema potrebe za detekcijom prisutnosti ili kretanja u ukopanoj podstanici)
Set za testiranje indikatora protoka
ON-Odvajač nečistoća
Automatski drenažni ventil (operativan K=25, nije operativan K=5)
SSV-Suvi sprinkler ventil
Mehaničko alarmno zvono
Sprinkler stojeća mlaznica
Sprinkler viseća mlaznica
Zasun
Loptasti ventil
Presostat (daje informaciju da je sprinkler sistem proradio)
Test ventil sa K faktorom sprinkler mlaznice
Posuda za eliminisanje lažnog alarma
OZ-Zasun sa mikroprekidačem (mikroprekidač daje informaciju o položaju ventila "zatvoren/otvoren)
Regulator pritiska
Manometar
Kompresor
NV-Neporvatni ventil
Cijevovod sa vodom
Signalizacija
IP-Indikator protoka
Cijevovod sa vazduhom

Projektant: "URBI PRO" d.o.o., Podgorica, ul. Bulevar Džona Kennedija br.27/2bc-B12, e-mail: office@urbipro.me, PIB: 02512-02001-11, MB: 03028847	Naziv projekta: **INVESTICIONO PROJEKTIRANJE NAJKRIŽI INOVACIJA Ul. Bulevar Savnika bb 81000 Podgorica**		
Naziv objekta: **Generalna rekonstrukcija dogradnja Sala za fizičko vaspitanje i uređenje fleširaj terasa za OŠ "Lastvanski partizanski odred"**	Sadržaj: Dio GP NTK, u cjelinaDio GP-a "Mogućnosti kreq(Zona C)", kat - zona: Dj, DN63 ; DN4,5,DN51 / DN63; 4.D: Cistrnja 1, Upalna Cistrnja		
Glavni inženjer: Arh. Vesella Ramković, dipl. ing.			
Projektant saradnik: Đurđen Đikolović B.I.A.	GLAVNI PROJEKAT		
Odgovorni projektant: **Vuk Kasalica dipl.inž.maš.**	Naziv crteža: SPRINKLER INSTALACIJA		R=1:50
Revizija broj:	Naziv crteža: TEHNOLOŠKA ŠEMA	Broj crteža: 3.8	Br. crteža: 105
Datum izrade: Jul, 2025. god.	Datum revizije:		

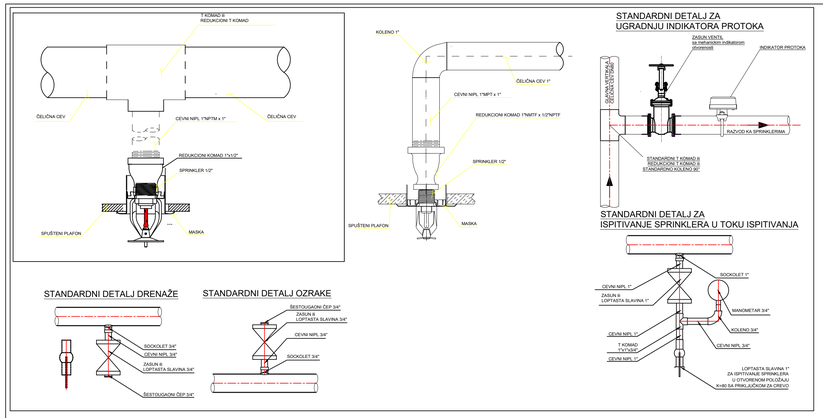

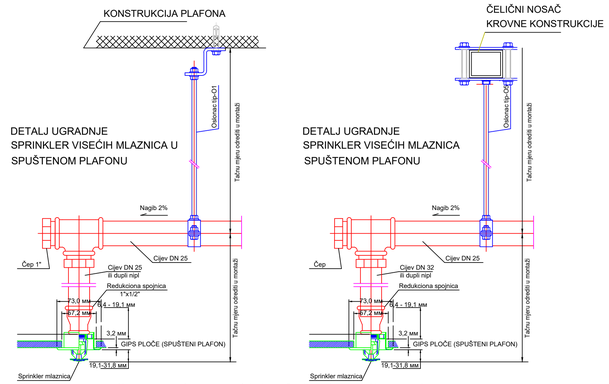

Napomena: prečnici cevi i rastojanja među elementima sprinkler cevovoda su samo ilustrativni, pri montaži koristiti odgovarajuće crteže osnove i aksonometrijske prikaze

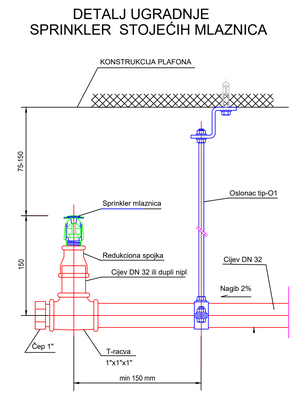

RASTOJANJE MLAZNICE OD KONSTRUKCIJE I OPREME KOJA SE NALAZI ISPOD SPRINKLER MLAZNICE

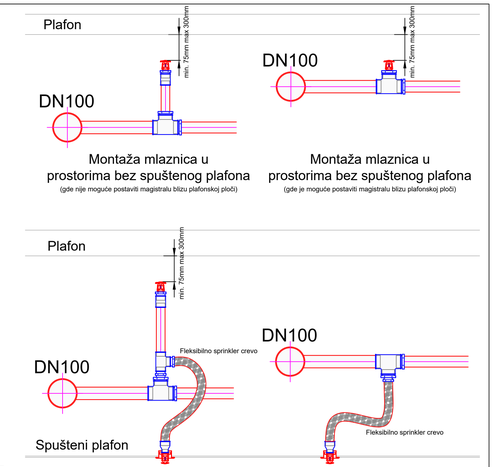

Napomena: Maksimalno rastojanje od oslonca do sprinkler mlaznice ne sme biti veće od 0,9m, ni manje od 0,15m.Fiksne oslonce montirati na magistralnu cev na svakih 40 m. Oslonci ne smeju sadržati gorive elemente

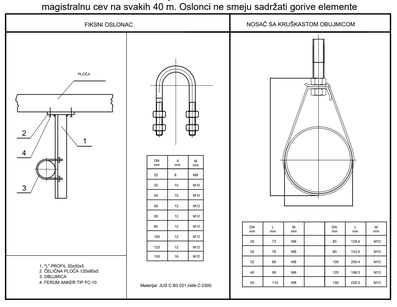

DN mm	d mm	M mm
25	8	M8
32	10	M10
40	10	M10
50	12	M12
65	12	M12
80	12	M12
100	12	M12
125	12	M12
150	16	M16

DN mm	L mm	M mm		DN mm	L mm	M mm
25	73	M8		65	128,4	M12
25	76	M8		80	153,4	M12
32	89	M8		100	202,4	M12
40	99	M8		125	198,5	M12
50	114	M8		150	228,5	M12

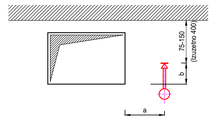

a (MM)	b (MM)
200	-20
400	0
600	30
800	60
1000	100
1200	140
1400	190
1600	260

DETALJ ROVA ISPOD TROTOARA

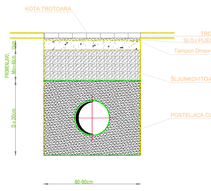

DETALJ ROVA SA ASFALTNIM ZAVRŠNIM SLOJEM
(magistralni putevi i gradske saobračajnice)

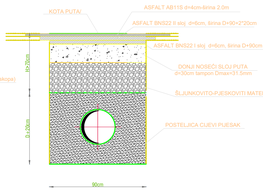

DETALJ ROVA SA ASFALTNIM ZAVRŠNIM SLOJEM
(nekategorisani i putevi manje važnosti)

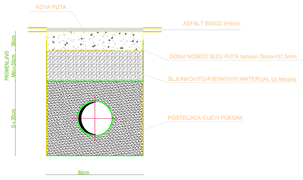

PROJEKTANT
"URBI.PRO" d.o.o., Podgorica,
ul.Radosava Burica bb, telefon 067/006-012,
e-mail office@urbipro.me
PDV: 30/31-14987-7, PIB: 03059847

INVESTITOR
MINISTARSTVO PROSVJETE,NAUKE I INOVACIJA
ulica Vaka Đurovića bb
81000 Podgorica

Objekat:
Rekonstrukcija-dogradnja Sala za fizičko vaspitanje i uređenje školskog dvorišta JU OŠ "Lovćenski partizanski odred"

Lokacija:
Dio UP 479, u zahvatu DUP-a "Bogdanov kraj(Zona C)", kat . parc. br. 3290/1 , 3291/2,3287/1 i 3293/1, K.O. Cetinje I, Opština Cetinje

Autor projekta:
Arh. Veselin Radulović, dipl. ing.

Vodeći projektant:
Dušan Džudović d.i.a.

Vrsta tehničke dokumentacije:
GLAVNI PROJEKAT

Odgovorni projektant:
Vuk Kasalica dipl.inž.maš.

Dio tehničke dokumentacije:
SPRINKLER INSTALACIJA

RAZMJERA:
R=1:50

Saradnik/ca:

Prilog:
Detalji ugradnje mlaznica i oslonci cjevovoda

Br.priloga: 3.10

Br.strane: 82

Datum izrade:
Jul, 2025. god.

Datum revizije: